KC-135 FLIGHT TRAINING UNIT SCOTT AFB, ILLINOIS

VDYF989075

126th AIR REFUELING WING
ILLINOIS AIR NATIONAL GUARD
SCOTT AIR FORCE BASE
BELLEVILLE, ILLINOIS

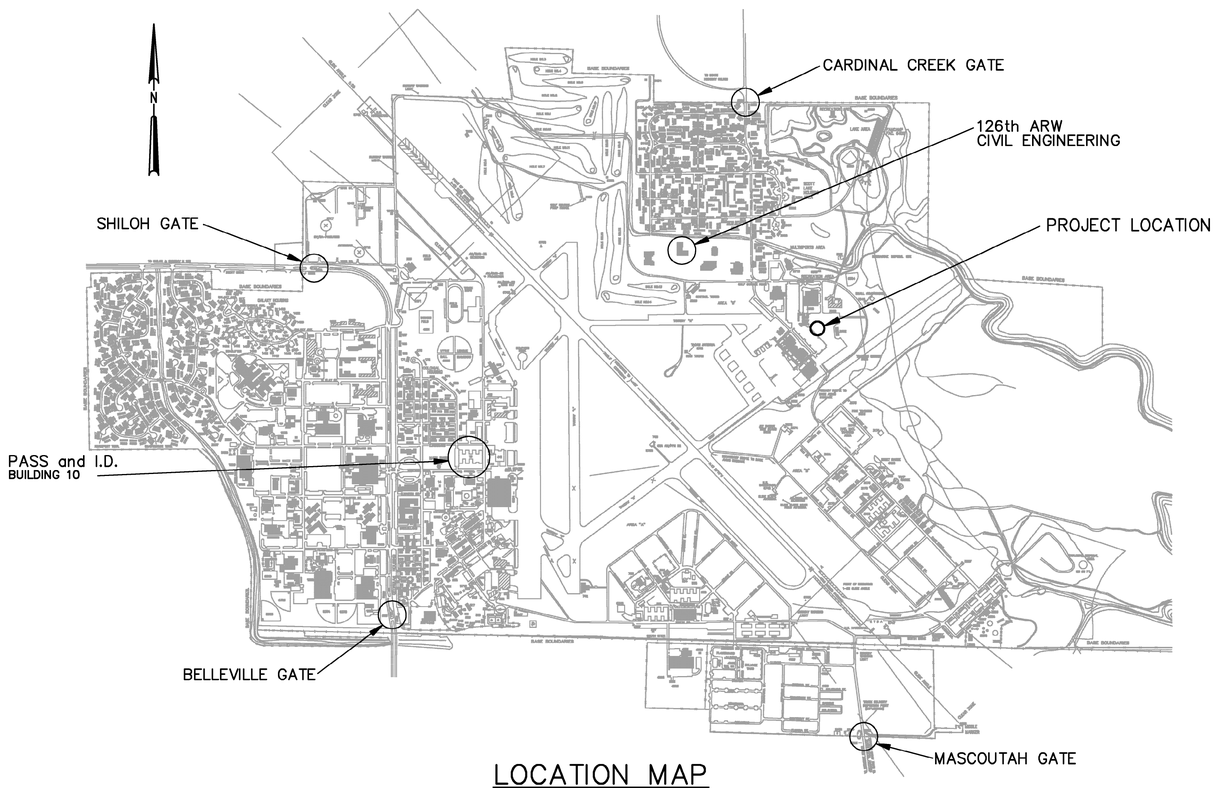

LOCATION MAP
NTS

NOTE:
SEE SPECIFICATION SECTION 01010
FOR DESCRIPTION OF COST OPTIONS.

INDEX TO DRAWINGS

SHEET NO.	FILE NAME	DRAWING NO.	TITLE
GENERAL			
1	0085g01d	G-1	TITLE SHEET/LOCATION MAP/INDEX TO DRAWINGS
2	0085g02d	G-2	ABBREVIATIONS AND DRAWING DESIGNATION LEGEND
3	0085g03d	G-3	CIVIL/SITEWORK LEGEND
4	0085g04d	G-4	ARCHITECTURAL/STRUCTURAL LEGEND
5	0085g05d	G-5	BUILDING SERVICES LEGEND
6	0085g06d	G-6	ELECTRICAL LEGEND
CIVIL/SITEWORK			
7	0085c01d	C-1	SITE PLAN
8	0085c02d	C-2	LANDSCAPE PLAN
9	0085c03d	C-3	LANDSCAPE DETAILS
ARCHITECTURAL			
10	0085a01d	A-1	FIRST FLOOR PLAN
11	0085a02d	A-2	SECOND FLOOR PLAN, HVAC MEZZANINE PLAN AND WALL TYPES
12	0085a03d	A-3	FIRST FLOOR REFLECTED CEILING PLAN
13	0085a04d	A-4	SECOND FLOOR REFLECTED CEILING, ROOF & FIRST FLOOR TILE PLANS
14	0085a05d	A-5	ELEVATIONS
15	0085a06d	A-6	BUILDING SECTIONS
16	0085a07d	A-7	SCHEDULES
17	0085a08d	A-8	DETAILS
18	0085a09d	A-9	DETAILS
19	0085a10d	A-10	ENLARGED BATHROOM PLAN, ELEVATIONS AND DETAILS
STRUCTURAL			
20	0085s01d	S-1	FOUNDATION/FLOOR PLAN
21	0085s02d	S-2	ROOF FRAMING PLAN
22	0085s03d	S-3	SECOND FLOOR AND HVAC MEZZANINE FRAMING PLANS
23	0085s04d	S-4	SECTIONS AND DETAILS
24	0085s05d	S-5	FRAMING ELEVATIONS AND DETAILS
25	0085s06d	S-6	SECTION AND DETAILS
BUILDING SERVICES			
26	0085h01d	H-1	FIRST FLOOR HVAC PLAN
27	0085h02d	H-2	SECOND FLOOR, HVAC MEZZANINE AND MECHANICAL ROOM PLANS
28	0085h03d	H-3	FIRST FLOOR PLUMBING PLAN
29	0085h04d	H-4	SECTIONS
30	0085h05d	H-5	HEATING WATER SYSTEM PIPING DETAIL
31	0085h06d	H-6	HVAC CONTROLS
32	0085h07d	H-7	SANITARY SEWER RISER DIAGRAM
33	0085h08d	H-8	WATER SUPPLY RISER DIAGRAM
34	0085h09d	H-9	SCHEDULES
ELECTRICAL/COMMUNICATION			
35	0085e01d	E-1	ONE-LINE DIAGRAM AND DETAILS
36	0085e02d	E-2	FIRST FLOOR POWER, COMMUNICATION AND FIRE ALARM PLAN
37	0085e03d	E-3	FIRST FLOOR LIGHTING PLAN
38	0085e04d	E-4	SECOND FLOOR POWER, COMMUNICATION AND LIGHTING PLANS
39	0085e05d	E-5	HVAC MEZZANINE PLAN AND DETAILS
40	0085e06d	E-6	SCHEDULES
41	0085e07d	E-7	RISER DIAGRAMS
STANDARD DETAILS			
42	0085d01d	D-1	CIVIL
43	0085d02d	D-2	CIVIL
44	0085d03d	D-3	STRUCTURAL
45	0085d04d	D-4	STRUCTURAL
46	0085d05d	D-5	STRUCTURAL
47	0085d06d	D-6	BUILDING SERVICES
48	0085d07d	D-7	BUILDING SERVICES
49	0085d08d	D-8	BUILDING SERVICES
50	0085d08d	D-9	ELECTRICAL

DSGN M.A.REICHERT					
DR M.A.REICHERT					
CHK K.K.HARGREAVES					
APVD K.K.HARGREAVES	NO.	DATE	REVISION	BY	APVD

VERIFY SCALE
BAR IS ONE INCH ON ORIGINAL DRAWING.
0 1"
IF NOT ONE INCH ON THIS SHEET, ADJUST SCALES ACCORDINGLY.

CH2MHILL

126 ARW ILLINOIS AIR NATIONAL GUARD
SCOTT AIR FORCE BASE, IL
PROJECT NUMBER VDYF989075
KC-135 FLIGHT TRAINING UNIT

GENERAL
TITLE SHEET/LOCATION MAP/
INDEX TO DRAWINGS

SHEET 1
DWG G-1
DATE MAY 2001
PROJ 160085.B1

FILENAME: 0085g01d.dwg PLOT DATE: 18-Jul-2001 PLOT TIME: 06:45:10

BID DOCUMENTS

REUSE OF DOCUMENTS: THIS DOCUMENT, AND THE IDEAS AND DESIGNS INCORPORATED HEREIN, AS AN INSTRUMENT OF PROFESSIONAL SERVICE, IS THE PROPERTY OF CH2M HILL AND IS NOT TO BE USED, IN WHOLE OR IN PART, FOR ANY OTHER PROJECT WITHOUT THE WRITTEN AUTHORIZATION OF CH2MHILL.
©CH2M HILL

ABBREVIATIONS

@	AT
AB	ANCHOR BOLT
ABDN	ABANDONED
ACBD	ACOUSTICAL BOARD
ACCU	AIR–COOLED CONDENSING UNIT
ACST	ACOUSTICAL TILE
ACT	ACOUSTICAL
ACU	AIR CONDITIONING UNIT
AD	AREA DRAIN
ADDL	ADDITIONAL
ADJ	ADJACENT
AHR	ANCHOR
AHU	AIR HANDLING UNIT
AL	ALUMINUM
ALTN	ALTERNATE
ANOD	ANODIZED
APPROX	APPROXIMATE
APVD	APPROVED
ARCH	ARCHITECTURAL
ARD	ACID RESISTANT DRAIN
ASSY	ASSEMBLY
ASU	AIR SUPPLY UNIT
AVG	AVERAGE
BC	BOOSTER HEATING COIL
BETW	BETWEEN
BF	BOTTOM FACE
BG	LOW WALL GRILLE
BLDG	BUILDING
BM	BEAM
BOD	BOTTOM OF DUCT
BOD_5	BIOCHEMICAL OXYGEN DEMAND (5 DAY TEST)
BOT	BOTTOM
BRG	BEARING
CAB.	CABINET
C/C	CHLORINE CONTACT
CD	CEILING DIFFUSER
CEM PLAS	CEMENT PLASTER
CF	CEILING FAN
CFM	CUBIC FOOT PER MINUTE
CG	CEILING GRILLE
CHEM	CHEMICAL
CHKD	CHECKERED
CFM	CUBIC FEET PER MINUTE
CJ	CONSTRUCTION JOINT
CI	CAST IRON
CISP	CAST IRON SOIL PIPE
CL	CENTER LINE
CL_2	CHLORINE
CLDI	CEMENT LINED DUCTILE IRON
CLG	CEILING
CLP	CLAY PIPE
CLR	CLEAR
CMP	CORRUGATED METAL PIPE
CMU	CONCRETE MASONRY UNITS
COL	COLUMN
CONC	CONCRETE
CONN	CONNECTION
CONST	CONSTRUCTION
CONT	CONTINUOUS
COR	CORNER
CP	CONCRETE PIPE
CPLG	COUPLING
CPVC	CHLORINATED POLYVINYL CHLORIDE
CR	CEILING REGISTER
C TO C	CENTER TO CENTER
CT	CERAMIC TILE
CTR	CENTER
CTRD	CENTERED
CU FT	CUBIC FEET
CW	CHILLED WATER
C/W	COMPLETE WITH
Δ	CENTRAL ANGLE
DBA	DEFORMED BAR ANCHOR
DBL	DOUBLE
DECHLOR	DECHLORINATION
DEG °	DEGREE
DET	DETAIL
DG	DOOR GRILLE
DIA	DIAMETER
DIAG	DIAGONAL
DIM	DIMENSION
DIP	DUCTILE IRON PIPE
DIR	DIRECTION
DISCH	DISCHARGE
DN	DOWN
DR	DRAINS
DRWR	DRAWER
DS	DOWNSPOUT
DWG	DRAWING
DWGS	DRAWINGS
DWL	DOWEL
E	EAST
E	EXTERNAL
EA	EACH
ELB	ELBOW
EC	ELECTRIC CONVECTOR
ECC	ECCENTRIC
EDH	ELECTRIC DUCT HEATER
EF	EACH FACE OR EXHAUST FAN
EFL	EFFLUENT
EL ELEV	ELEVATION
ELEC	ELECTRICAL
EQL	EQUAL
EQL SP	EQUALLY SPACED
EQPT	EQUIPMENT
EW	EACH WAY
EXA	EXHAUST AIR
EXP JT	EXPANSION JOINT
EXT	EXTERIOR
EXST	EXISTING
FAB	FABRICATION
F FL EL	FINISHED FLOOR ELEVATION
FACIL	FACILITY
FC	FLEXIBLE CONNECTION
FCA	FLANGED COUPLING ADAPTER
FCTY, FACT.	FACTORY
FEXT	FIRE EXTINGUISHER
FEXTC	FIRE EXTINGUISHER W/ CABINET
FD	FLOOR DRAIN OR FIRE DAMPER
FDN	FOUNDATION
FLEX	FLEXIBLE
FLG	FLANGE
FLR	FLOOR
FNSH	FINISH
FTC	FIN TUBE CONVECTOR
FTG	FOOTING
FTU	FLIGHT TRAINING UNIT
G	GAS
GA	GAUGE
GB	GRAB BAR
GBD	GRAVITY BACKDRAFT DAMPER
GAL	GALLON
GALV	GALVANIZED
GALVS	GALVANIZED STEEL
GIV	GRAVITY INTAKE VENTILATOR
GPD	GALLONS PER DAY
GRV	GRAVITY RELIEF VENTILATOR
GUH	GAS UNIT HEATER
GVL	GRAVEL
GWB	GYPSUM WALLBOARD
GYP PLAS	GYPSUM PLASTER
HAS	HEADED ANCHOR STUD
HCR	HIGH CAPACITY REGISTER
HD	HUB DRAIN
HDNR	HARDENER
HDR	HEADER
HGT	HEIGHT
HORIZ	HORIZONTAL
HM	HOLLOW METAL
HR	HOUR
HTR	HIGH THROW REGISTER
HV	HOSE VALVE
HVAC	HEATING, VENTILATING, AND AIR CONDITIONING
HW	HOT WATER
I&C	INSTRUMENTATION AND CONTROL
ID	INSIDE DIAMETER
IF	INSIDE FACE
INFL	INFLUENT
INSTL	INSTALL
INSUL	INSULATION
INVT	INVERT
ITG	INSULATED TEMPERED GLASS
JT	JOINT
L	LENGTH OF CURVE
LB	POUNDS
LB/D	POUNDS PER DAY
LG	LONG
LLV	LONG LEG VERTICAL
LNTL	LINTEL
LONG	LONGITUDINAL
LR	LONG RADIUS
LT	LIGHT
MATL	MATERIAL
MAU	MAKE UP AIR UNIT
MAX	MAXIMUM
MB	MACHINE BOLT
MCC	MOTOR CONTROL CENTER
MD	MOTORIZED DAMPER
MECH	MECHANICAL
MFR	MANUFACTURER
MGD	MILLION GALLONS PER DAY
MG/L	MILLIGRAMS PER LITER
MH	MANHOLE
MIN	MINIMUM
MISC	MISCELLANEOUS
MO	MASONRY OPENING
MON	MONUMENT
MTG	MOUNTING
MTL	METAL
MTRG	METERING
N	NORTH
NIC	NOT IN CONTRACT
NO.	NUMBER
NOM	NOMINAL
NORM	NORMAL
NTS	NOT TO SCALE
OA	OUTSIDE AIR
OC	ON CENTER
OD	OUTSIDE DIAMETER OR OVERFLOW DRAIN
OF	OUTSIDE FACE
O/H	OVERHEAD
O TO O	OUT TO OUT
OPNG	OPENING
OPP	OPPOSITE
PC	POINT OF CURVATURE
PI	POINT OF INTERSECTION
P&ID	PROCESS AND INSTRUMENTATION DIAGRAM
PJF	PREMOLDED JOINT FILLER
PL	PLATE
PLAM	PLASTIC LAMINATE
PLYWD	PLYWOOD
POC	POINT ON CURVE
POT	POINT ON TANGENT
PR	PAIR
PRCST	PRECAST
PS	PROJECTION SCREEN
PSF	POUNDS PER SQUARE FOOT
PSI	POUNDS PER SQUARE INCH
PT	POINT OF TANGENCY
PTD	PAPER TOWEL DISPENSER
PTD/R	PAPER TOWEL DISPENSER/RECEPTACLE
PVC	POINT OF VERTICAL CURVATURE OR POLYVINYL CHLORIDE
PVI	POINT OF VERTICAL INTERSECTION
PVMT	PAVEMENT
PVT	POINT OF VERTICAL TANGENCY
QDRNT	QUADRANT
R OR RAD	RADIUS OR RISER
RBR	RUBBER
RC	REINFORCED CONCRETE
RCP	REINFORCED CONCRETE PIPE
RD	ROOF DRAIN
RDCR	REDUCER
REHAB	REHABILITATION/REHABILITATED
REINF	REINFORCE
REQD	REQUIRED
RESIL	RESILIENT
RM	ROOM
RO	ROUGH OPENING
RR	REDUCER
RST	REINFORCING STEEL
S	SOUTH
SA	SUPPLY AIR
SAT	SUSPENDED ACOUSTICAL TILE
SCHED	SCHEDULE
SD	SOAP DISPENSER OR SLOT DIFFUSER
SECT	SECTION
SG	SAFETY GLASS
SH	SHEET
SHTG	SHEETING
SIM	SIMILAR
SLV	SHORT LEG VERTICAL
S.O.	SHUTOFF
SPECD	SPECIFIED
SPECS	SPECIFICATIONS
SPG	SPACING
SQ	SQUARE
SST, SS	STAINLESS STEEL
STA	STATION
STD	STANDARD
STIF	STIFFENER
STOR	STORAGE
STR	STRAIGHT
STRUCT	STRUCTURAL
STL	STEEL
SYMM	SYMMETRICAL
T	TREAD OR TANGENT LENGTH
TAR	TRANSFER AIR REGISTER
T&B	TOP AND BOTTOM
TC	TOP OF CONCRETE
TCU	TERMINAL CONTROL UNIT
TEMP	TEMPERED
TF	TOP FACE
TG	TEMPERED GLASS
THK	THICK
THRD	THREADED
TOC	TOP OF CONCRETE
TPD	TONS PER DAY
TPI	TURNOUT POINT OF INTERSECTION
TRANSV	TRANSVERSE
TSS	TOTAL SUSPENDED SOLIDS
TST	TOP OF STEEL
TTD	TOILET TISSUE DISPENSER
TW	TOP OF WALL
TYP	TYPICAL
UH	UNIT HEATER
UON	UNLESS OTHERWISE NOTED
UPST	UN–GLAZED PORCELAIN STONEWARE FLOOR TILE
UR	URINAL
V	VENT
VAT	VINYL ASBESTOS TILE
VERT	VERTICAL
VCP	VITRIFIED CLAY PIPE
VCT	VINAL COMPOSITION TILE
VD	VOLUME DAMPER
VTR	VENT THRU ROOF
VWC	VINYL WALL COVERING
W	WEST
W/	WITH
W1	POTABLE WATER
WC	WATER CLOSET
WD	WOOD
WG	WIRE GLASS
WH	WATER HEATER
WK	WEEK
WP	WORKING POINT
WR GWB	WATER RESISTANT GYPSUM WALLBOARD
WR	WASTE RECEPTACLE
WS	WATER STOP OR WATER SURFACE OR WELDED STEEL
WSG	WALL SUPPLY GRILLE
WSR	WALL SUPPLY REGISTER
WWF	WELDED WIRE FABRIC
WWM	WELDED WIRE MESH
XFMR	TRANSFORMER
YR	YEAR

DRAWING DESIGNATION LEGEND

DRAWING NUMBER DESIGNATION

INDICATES DRAWING GROUP LETTER:

- A ARCHITECTURAL
- B BUILDING SERVICES
- C CIVIL/SITEWORK
- D STANDARD DETAILS
- E ELECTRICAL/COMMUNICATION
- G GENERAL
- S STRUCTURAL

A–4

INDICATES DRAWING NUMBER

DETAIL AND SECTION DESIGNATION

SECTION (LETTER) OR DETAIL (NUMERAL) DESIGNATION

DRAWING NUMBER (REPLACED WITH A LINE IF TAKEN AND SHOWN ON SAME SHEET)

B
A–4

ON DRAWING WHERE SECTION OR DETAIL IS TAKEN:

DRAWING NUMBER WHERE SHOWN

ON DRAWING WHERE SECTION OR DETAIL IS SHOWN:

DRAWING NUMBER(S) WHERE TAKEN

GENERAL NOTES:

1. THIS IS A STANDARD LEGEND SHEET. SOME ABBREVIATIONS MAY APPEAR ON THIS SHEET AND NOT ON THE PLANS.
2. FOR PIPING CALLOUTS, SEE FLOW STREAM IDENTIFICATIONS ON BUILDING SERVICES LEGEND.
3. CONTACT THE ENGINEER FOR ABBREVIATIONS NOT LISTED ON THE DRAWINGS.

©CH2M HILL
REUSE OF DOCUMENTS: THIS DOCUMENT, AND THE IDEAS AND DESIGNS INCORPORATED HEREIN, AS AN INSTRUMENT OF PROFESSIONAL SERVICE, IS THE PROPERTY OF CH2M HILL AND IS NOT TO BE USED, IN WHOLE OR IN PART, FOR ANY OTHER PROJECT WITHOUT THE WRITTEN AUTHORIZATION OF CH2MHILL.

BID DOCUMENTS

DSGN M.A.REICHERT						
DR M.A.REICHERT						
CHK K.K.HARGREAVES						
APVD K.K.HARGREAVES	NO.	DATE	REVISION	BY	APVD	

VERIFY SCALE
BAR IS ONE INCH ON ORIGINAL DRAWING.
0 1"
IF NOT ONE INCH ON THIS SHEET, ADJUST SCALES ACCORDINGLY.

CH2MHILL

126 ARW ILLINOIS AIR NATIONAL GUARD
SCOTT AIR FORCE BASE, IL
PROJECT NUMBER VDYF989075
KC–135 FLIGHT TRAINING UNIT

GENERAL
ABBREVIATIONS AND DRAWING DESIGNATION LEGEND

SHEET	2
DWG	G–2
DATE	MAY 2001
PROJ	160085.B1

FILENAME: 0085g02d.dlv PLOT DATE: 18–JUL–2001 PLOT TIME: 07:10:55

EXISTING (OR OTHER CONTRACT)	THIS CONTRACT	
96.5 / 96.5	96.5 / 96.5	CONTOUR LINE
93.6 OR 93.6	93.6 OR 93.6	SPOT ELEVATION
		GROUND SLOPE DESIGNATION
5+00	5+00	ROAD CENTERLINE STATIONING
		GRAVEL ROAD
		EXISTING ROADS TO REMAIN
		CULVERT
		MANHOLE
		STRUCTURE LOCATION POINT
CB OR SWI	CB OR SWI	CATCH BASIN, STORMWATER INLET
		DI (DROP INLET)
		DRAINAGE WAY OR DITCH
		DRAWING MATCH LINE
		CENTERLINE, BUILDING, ROAD, ETC.
		STAGING, STOCKPILE, AND PLAN HOLDING AREA LIMITS
		EASEMENT LINE
SS		SANITARY SEWER
SD		STORM SEWER
W		WATER LINE
E		UNDERGROUND ELECTRIC LINE
T		UNDERGROUND TELEPHONE LINE
G		GAS LINE
SBS		SLUDGE LINE
		EXISTING FENCE TO REMAIN
		TEMPORARY FENCE
		PERMANENT FENCE
		POWER POLE WITH GUY SUPPORT
P	P	RELOCATED OVERHEAD POWER LINE
OR	OR	REMODELED EXISTING PLANT STRUCTURE
	OR	NEW STRUCTURE–THIS CONTRACT
		GRAVEL AREA
		EXISTING TREES TO REMAIN
		UTILITY OR TELEPHONE POLE
		ROCKS
		TREES AND SHRUBS
		ROAD
		RAILROAD TRACKS
	B–1	SOIL BORING LOCATION AND NUMBER

EXISTING (OR OTHER CONTRACT)	THIS CONTRACT	
		EXISTING STRUCTURE *
		EXISTING STRUCTURE TO BE REMOVED *
		AC PAVEMENT *
		GRAVEL SURFACE *
		CONCRETE WALK *
		RIPRAP
3:1	4:1	EMBANKMENT SLOPE AS INDICATED
		LIGHT STANDARD
		PROPERTY LINE/RIGHT OF WAY
		FIRE HYDRANT
		SIGN
		BENCHMARK
		PI (POINT OF INTERSECTION)
	35.7	VPI (VERTICAL POINT OF INTERSECTION) AND FINISH GRADE ELEVATION
		HORIZONTAL CONTROL POINT
		VERTICAL CONTROL POINT
		RADIAL POINT

CURVE DATA

R = RADIUS L = LENGTH

Δ = DELTA T = TANGENT

YARD PIPING

DOUBLE LINE	SINGLE LINE	
		EXISTING PIPE
		NEW PIPE
		EXISTING PIPE TO BE REMOVED OR ABANDONED

EXISTING	NEW	
		NON–FREEZE HOSE VALVE (V–X) X = NO. IN SPECIFICATIONS
		NON–FREEZE HOSE VALVE WITH HOSE RACK (V–X) X = NO. IN SPECIFICATIONS
		GATE VALVE
		BUTTERFLY VALVE
	FLOW, SEATING PORT	ECCENTRIC PLUG VALVE
		INDICATOR POST VALVE

GENERAL NOTES:

1. * SYMBOL – ONLY WHERE REQUIRED FOR CLARITY.
2. EXISTING STRUCTURES AND FACILITIES ARE SHOWN AS SCREEN BACKGROUND. NEW STRUCTURES ARE SHOWN IN HEAVY LINE WEIGHTS.
3. EXISTING PIPING AND EQUIPMENT IS SHOWN SCREENED. NEW PIPING AND EQUIPMENT IS SHOWN HEAVY–LINED.
4. FOR NEW PIPING FLOW STREAM IDENTIFICATION, SEE ABBREVIATIONS AND FLOW STREAM IDENTIFICATION.
5. THIS IS A STANDARD LEGEND SHEET. SOME SYMBOLS MAY APPEAR ON THIS SHEET AND NOT ON THE PLANS.

©CH2M HILL
REUSE OF DOCUMENTS: THIS DOCUMENT, AND THE IDEAS AND DESIGNS INCORPORATED HEREIN, AS AN INSTRUMENT OF PROFESSIONAL SERVICE, IS THE PROPERTY OF CH2M HILL AND IS NOT TO BE USED, IN WHOLE OR IN PART, FOR ANY OTHER PROJECT WITHOUT THE WRITTEN AUTHORIZATION OF CH2MHILL.

BID DOCUMENTS

DSGN S.M.BRUER						
DR M.A.REICHERT						
CHK C.G.BARNETT						
APVD K.K.HARGREAVES	NO.	DATE	REVISION	BY	APVD	

VERIFY SCALE
BAR IS ONE INCH ON ORIGINAL DRAWING.
0 1"
IF NOT ONE INCH ON THIS SHEET, ADJUST SCALES ACCORDINGLY.

CH2MHILL

126 ARW ILLINOIS AIR NATIONAL GUARD
SCOTT AIR FORCE BASE, IL
PROJECT NUMBER VDYF989075
KC–135 FLIGHT TRAINING UNIT

GENERAL

CIVIL/SITEWORK LEGEND

SHEET 3
DWG G–3
DATE MAY 2001
PROJ 160085.B1

FILENAME: 0085g03d.dlv PLOT DATE: 18–JUL–2001 PLOT TIME: 07:13:42

SYMBOL	LEGEND
ACTIVE / INACTIVE	INDICATES PAIR OF DOORS
100A	DOOR NUMBER
W3	WINDOW NUMBER
103	ROOM NUMBER
3 / A-3 (DIRECTION SHOWN / DRAWING WHERE SHOWN)	INTERIOR WALL ELEVATION
3	SIGN INDICATION
X	COLUMN GRID NUMBER OR LETTER
	HANDRAIL
WALL / FEXT	FIRE EXTINGUISHER "C" = CABINET
1	WALL TYPE
	CONCRETE
	CMU PLAN
	CMU SECTION
	METAL STUD WALL PLAN
	STUD WALL PLAN
	MASONRY VENEER
	GYPSUM WALLBOARD
	RIGID INSULATION
	BATT INSULATION
	PLYWOOD
	STEEL
	ACOUSTICAL TILE
	WOOD, ROUGH CONTINUOUS

SYMBOL	LEGEND
	WOOD, ROUGH NON-CONTINUOUS
	WOOD, FINISHED
	GROUND SURFACE

GENERAL ARCHITECTURAL NOTES:

1. UNLESS OTHERWISE NOTED, PLAN DIMENSIONS ARE TO COLUMN GRID ON CENTERLINES, NOMINAL SURFACE OF MASONRY, CENTER STUDS AND FACE OF CONCRETE WALLS. CLEAR DIMENSION IS THE MINIMUM DISTANCE BETWEEN THE FINISHED SURFACE OF WALLS.
2. REPETITIVE FEATURES ARE NOT DRAWN IN THEIR ENTIRETY AND SHALL BE COMPLETELY PROVIDED AS IF DRAWN IN FULL.
3. WHERE DOOR IS LOCATED NEAR CORNER OF ROOM AND IS NOT LOCATED BY DIMENSION ON PLAN OR DETAILS, DIMENSION SHALL BE 8-INCHES FROM FACE OF MASONRY WALL TO EDGE OF ROUGH OPENING AND 4-INCHES FROM FACE OF GYPSUM WALL TO EDGE OF ROUGH OPENING.
4. PROVIDE MAXIMUM 1/2" CLEAR AROUND ALL PENETRATIONS THROUGH FIRE-RATED WALLS. FILL WITH FIRE SAFING AND PROVIDE TYPE 11 SEALANT AND BACKER ROD ON BOTH SIDES OF WALL. COVER WITH ESCUTCHEON PLATE, BOTH SIDES OF WALL, PAINT ESCUTCHEON SYSTEM 107 TO MATCH WALL COLOR.
5. LINE OF EXISTING GRADES, AS SHOWN ON THE BUILDING ELEVATIONS AND SECTIONS ARE APPROXIMATE. THEY ARE AT THE BUILDING FACE, OR ON THE SECTION END EXCEPT AS NOTED.
6. VERIFY ALL ROUGH-IN DIMENSIONS FOR EQUIPMENT PROVIDED IN THIS CONTRACT, OR BY OTHERS.
7. REFER TO ARCHITECTURAL, STRUCTURAL, MECHANICAL, ELECTRICAL AND OTHER CATEGORIES OF DRAWINGS FOR ADDITIONAL NOTES.
8. VERIFY SIZE AND LOCATION OF, AND PROVIDE: ALL OPENINGS THROUGH FLOORS AND WALLS, ACCESS DOORS, FURRING, CURBS, ANCHORS AND INSERTS. PROVIDE ALL BASES, BLOCKING REQUIRED FOR ACCESSORIES, MECHANICAL, ELECTRICAL AND OTHER EQUIPMENT
9. AT SOUND INSULATED WALLS, FULL HEIGHT PARTITIONS SHALL BE SEALED BOTH SIDES WITH ACOUSTIC SEALANT; TOP, BOTTOM, INTERSECTIONS, DOOR FRAMES, GLAZED OPENING FRAMES, AND OTHER PENETRATIONS.

GENERAL STRUCTURAL NOTES:

(THESE NOTES APPLY TO ALL STRUCTURAL DRAWINGS)

GENERAL

1. ALL MATERIALS AND WORKMANSHIP SHALL CONFORM TO THE 1997 UBC CODE.

FOUNDATIONS

1. NET ALLOWABLE BEARING PRESSURE 2,000 PSF.
2. 2'-0" MINIMUM COMPACTED GRANULAR FILL AS SPECIFIED, REQUIRED BENEATH ALL SLABS AND FOOTINGS.

LOADS

(IN ACCORDANCE WITH 1997 UBC CODE).

1. ROOF LOADS:

LIVE LOAD	20 PSF
SNOW LOAD (MIN)	15 PSF
DEAD LOAD	10 PSF
MISC MECH AND ELEC	10 PSF
NET UPLIFT	15 PSF

2. 2ND FLOOR

LIVE LOAD	100 PSF
MISC MECH AND ELEC	10 PSF

3. MEZZANINE

LIVE LOAD	150 PSF
MISC MECH AND ELEC	10 PSF

4. STAIRS

LIVE LOAD	100 PSF

5. WIND LOAD

BASIC WIND SPEED	70 MPH
Iw = WIND LOAD IMPORTANCE FACTOR	1.0
WIND EXPOSURE CATEGORY	C

6. EARTHQUAKE LOAD:

SEISMIC ZONE	2A
SOIL PROFILE	Sd
I = SEISMIC IMPORTANCE FACTOR	1.0

CONCRETE

1. ALL CAST-IN-PLACE CONCRETE SHALL HAVE A MINIMUM 28-DAY COMPRESSIVE STRENGTH OF 4,000 PSI, UNLESS OTHERWISE NOTED.
2. REINFORCING STEEL SHALL CONFORM TO ASTM A615, GRADE 60. SEE REINFORCING DETAIL NOTES BELOW.

REINFORCING STEEL

1. CLEARANCE FOR REINFORCEMENT BARS, UNLESS SHOWN OTHERWISE, SHALL BE:
   - WHEN PLACED ON GROUND: —— 3"
   - ALL OTHER CONCRETE SURFACES:
     - #5 BAR OR SMALLER —— 1 1/2"
     - #6 BAR OR LARGER —— 2"
2. ALL REINFORCEMENT LAPS, UNLESS OTHERWISE NOTED, SHALL SATISFY THE FOLLOWING MINIMUM REQUIREMENT:

CONCRETE DESIGN STRENGTH = 4,000 PSI			
BAR SIZE	#3	#4	#5
LAP SPLICE LENGTH			
TOP BAR *	1'-4"	1'-7"	2'-0"
OTHER BAR	1'-4"	1'-4"	1'-7"
EMBEDMENT LENGTH			
TOP BAR *	1'-0"	1'-3"	1'-7"
OTHER BAR	1'-0"	1'-0"	1'-2"

* TOP BARS SHALL BE DEFINED AS ANY HORIZONTAL BARS PLACED SUCH THAT MORE THAN 12" OF FRESH CONCRETE IS CAST IN THE MEMBER BELOW THE BAR IN ANY SINGLE POUR. HORIZONTAL WALL BARS ARE CONSIDERED TOP BARS.

CONCRETE MASONRY (CMU)

1. MINIMUM STRENGTH OF MASONRY ASSEMBLAGE, f'm = 1500 PSI. MINIMUM VERTICAL WALL REINFORCING, PLUS ADDITIONAL REINFORCING AS SHOWN ON PLANS, SHALL BE:

WALL THICKNESS	MIN VERTICAL REINF
8"	#6@32" CENTERED

2. FULL ALLOWABLE STRESSES USED FOR DESIGN.
3. ALL REINFORCING STEEL SHALL CONFORM TO ASTM A615, GRADE 60.
4. MAXIMUM SPACING OF HORIZONTAL JOINT REINFORCEMENT SHALL BE 1'-4".
5. FOR TYP CMU REINFORCING SEE (4004).
6. SEE DRAWING S-1 FOR LOCATIONS OF SOLID GROUTED WALLS.

METAL DECK

1. DECKING SHALL BE CONTINUOUS OVER 2 SPANS MINIMUM, EXCEPT AT STAIR LANDINGS.

GENERAL NOTE:

1. THIS IS A STANDARD LEGEND SHEET. SOME SYMBOLS MAY APPEAR ON THIS SHEET AND MAY NOT ON THE PLANS.

REUSE OF DOCUMENTS: THIS DOCUMENT, AND THE IDEAS AND DESIGNS INCORPORATED HEREIN, AS AN INSTRUMENT OF PROFESSIONAL SERVICE, IS THE PROPERTY OF CH2M HILL AND IS NOT TO BE USED, IN WHOLE OR IN PART, FOR ANY OTHER PROJECT WITHOUT THE WRITTEN AUTHORIZATION OF CH2MHILL. ©CH2M HILL

BID DOCUMENTS

DSGN R.G.SIEBERS D.R.LANGE						VERIFY SCALE
DR M.A.REICHERT						BAR IS ONE INCH ON ORIGINAL DRAWING. 0 — 1" IF NOT ONE INCH ON THIS SHEET, ADJUST SCALES ACCORDINGLY.
CHK K.K.HARGREAVES R.A.GERMAINE						
APVD K.K.HARGREAVES	NO.	DATE	REVISION	BY	APVD	

CH2MHILL

126 ARW ILLINOIS AIR NATIONAL GUARD
SCOTT AIR FORCE BASE, IL
PROJECT NUMBER VDYF989075
KC-135 FLIGHT TRAINING UNIT

GENERAL

ARCHITECTURAL/STRUCTURAL LEGEND

SHEET	4
DWG	G-4
DATE	MAY 2001
PROJ	160085.B1

FILENAME: 0085g04d.dlv PLOT DATE: 18-JUL-2001 PLOT TIME: 07:14:45

PIPE AND FITTING SYMBOLS

DOUBLE LINE | SINGLE LINE

- EXISTING PIPE
- NEW PIPE
- EXISTING PIPE TO BE ABANDONED
- EXISTING PIPE TO BE REMOVED
- FLANGED COUPLING ADAPTER
- FLEXIBLE COUPLING
- FLEXIBLE COUPLING WITH THRUST TIES
- STEEL BELLOWS EXP JOINT
- ELASTOMER BELLOWS EXP JOINT
- ELBOW UP
- ELBOW DOWN
- TEE UP
- TEE DOWN
- LATERAL UP
- LATERAL DOWN
- CONCENTRIC REDUCER
- ECCENTRIC REDUCER
- UNION
- ELBOW, 90 DEGREE
- CROSS
- TEE
- ELBOW, 45 DEGREE
- LATERAL
- CAP
- ANCHOR

NOTES:

1. ONLY FLANGED END CONNECTIONS ARE SHOWN HERE FOR DOUBLE LINE FITTINGS. FITTINGS WITH OTHER END PATTERNS ARE SHOWN SIMILARLY ON THE CONSTRUCTION DRAWINGS. ALSO SEE PIPING SPECIFICATIONS.
2. SYMBOLS SHOWN HERE FOR SINGLE LINE FITTINGS ARE GENERIC ONLY. REFER TO PIPING SPECIFICATIONS FOR SPECIFIC END CONNECTIONS FOR SINGLE LINE PIPE AND FITTINGS.
3. EXISTING PIPE AND EQUIPMENT IS SHOWN LIGHT-LINED AND/OR SCREENED AND IS NOTED AS EXISTING. NEW PIPING AND EQUIPMENT IS SHOWN HEAVY-LINED.

MISCELLANEOUS PIPING SYMBOLS

- STRAINER
- SIGHT GLASS
- FLEXIBLE (ELASTOMER) PIPE CONNECTION
- H — GAUGE WITH COCK
- THERMOMETER
- ROTAMETER
- PIG LAUNCHER
- PIG CATCHER
- XX — AIR SET, XX = SUPPLY PRESSURE – PSIG
- PS 26-1-2 — TYPICAL INSTRUMENT SYMBOL (SEE I&C LEGEND)
- HOSE VALVE (HV- X) OR (V-X), X = NO. IN SPECS
- X — STEAM TRAP, X = NO. IN SPECS
- FS — FLOW SWITCH
- FM X — FLOW METER, X = NO. SHOWN IN SPECS
- PS H — PRESSURE SWITCH
- S — 1/2"-V307

MECHANICAL LEGEND AND NOTES:

GENERAL PIPING NOTES:

1. LAY PIPE TO UNIFORM GRADE BETWEEN INDICATED ELEVATION POINTS.
2. SIZE OF FITTINGS SHOWN ON PLANS SHALL CORRESPOND TO ADJACENT STRAIGHT RUN OF PIPE, UNLESS OTHERWISE INDICATED. TYPE OF JOINT AND FITTING MATERIAL SHALL BE THE SAME AS SHOWN FOR ADJACENT STRAIGHT RUN OF PIPE.
3. LOCATION AND NUMBER OF PIPE HANGERS AND PIPE SUPPORTS IF SHOWN IS ONLY APPROXIMATE. FINAL SUPPORT REQUIREMENTS SHALL BE AS REQUIRED IN THE SPECIFICATIONS.
4. SYMBOLS, LEGENDS, AND PIPE USE IDENTIFICATIONS SHOWN SHALL BE FOLLOWED THROUGHOUT THE PLANS, WHEREVER APPLICABLE. NOT ALL OF THE VARIOUS PIPING COMPONENTS ARE NECESSARILY USED IN THE PROJECT.
5. ALL BURIED PIPING SPECIFIED TO BE PRESSURE TESTED, EXCEPT FLANGED, WELDED, OR SCREWED PIPING, SHALL BE PROVIDED WITH CONCRETE THRUST BLOCKS AT ALL DIRECTION CHANGES, UNLESS OTHERWISE NOTED.
6. NUMBER AND LOCATION OF UNIONS SHOWN ON PLANS IS ONLY APPROXIMATE. PROVIDE ALL UNIONS NECESSARY TO FACILITATE CONVENIENT REMOVAL OF VALVES AND MECHANICAL EQUIPMENT.
7. THE SPACE ABOVE THE REFLECTED CEILING IS A RETURN AIR PLENUM. AIR GOES INTO THE RETURN AIR PLENUM VIA PERFORATED RETURN AIR CEILING GRILLES.
8. THE INTERNATIONAL MECHANICAL CODE-1996 REQUIRES 20 CFM PER PERSON OF VENTILATION. BASED ON AN OCCUPANCY OF 24, THE REQUIRED AMOUNT IS 480 CFM. AHU-1, WHICH SERVES THE ENTIRE FTU, PROVIDES 1,000 CFM OF VENTILATION.

HEATING, VENTILATING, AND AIR CONDITIONING SYMBOLS

- WALL REGISTER OR GRILLE (SUPPLY) WSG, WSR, HCSG, RWSR
- CEILING DIFFUSER OR REGISTER (SUPPLY) CD, RCD, PCD, LSD, LCD, LTD
- CEILING REGISTER OR GRILLE (RETURN AND EXHAUST) CG, CR, PCG, HCG
- WALL REGISTER OR GRILLE (RETURN AND EXHAUST) WG, WR, HCG
- FG — FLOOR GRILLE (SUPPLY AND RETURN)
- TURNING VANES
- 45 DEGREE ENTRY
- SPIN-IN COLLAR WITH BALANCING DAMPER
- SOUND ATTENUATED DUCT
- FD — FIRE DAMPER
- SPLITTER DAMPER
- MANUAL OPPOSED-BLADE DAMPER
- MANUAL VOLUME DAMPER
- M — MOTORIZED DAMPER
- SD — SMOKE DAMPER
- FLEXIBLE CONNECTION
- FLEXIBLE DUCTWORK
- R — INCLINED RISE IN DUCT
- D — INCLINED DROP IN DUCT
- SUPPLY DUCT UP
- SUPPLY DUCT DOWN
- INTAKE, RETURN, OR EXHAUST DUCT UP
- INTAKE, RETURN, OR EXHAUST DUCT DOWN
- T — TEMPERATURE SENSOR
- H — HUMIDITY SENSOR
- MMP — MECHANICAL MOUNTING PANEL
- VIBRATION ELIMINATOR
- (200) — 200 SCFM
- M — MOTORIZED VALVE

PLUMBING FIXTURE IDENTIFICATION

DF	DRINKING FOUNTAIN
HV	HOSE VALVE
LAV	LAVATORY
LSK	LABORATORY SINK
RD	ROOF DRAIN
SH	SHOWER
SK	SINK
SSK	SERVICE SINK
WC	WATER CLOSET
WH	WATER HEATER
UR	URINAL

EXAMPLE: LAV 2

FIXTURE LEGEND

NO. IN SPECIFICATIONS

VALVE DESIGNATIONS

V405

VALVE DESIGNATION

VALVE TYPE, SEE SPECIFICATIONS

REFER TO PIPE DATA SHEETS ATTACHED TO SECTION 15060 FOR STANDARD VALVES. UNIQUE OR EXCEPTIONS WILL BE SPECIFIED AS SHOWN.

PIPING DESIGNATION

EXAMPLE:

16"-RAS

16" – RAS

PIPE USE IDENTIFICATION LEGEND

NOMINAL PIPE DIAMETER

BUILDING SERVICES SYMBOLS

- REDUCED PRESSURE BACKFLOW PREVENTER (BP)
- XCO — X = F – FLOOR CLEANOUT; W – WALL CLEANOUT
- HD-X — HUB DRAIN, X = NO. IN SPECS
- FD-X — FLOOR DRAIN, X = NO. IN SPECS

ACCU	AIR COOLED CONDENSING UNIT	H	HUMIDIFIER
AHU	AIR HANDLING UNIT	HW	HOT WATER
		HWC	HOT WATER RECIRCULATING
B	BOILER	HWR	HOT WATER RETURN
		HWS	HOT WATER SUPPLY
CD	CONDENSATE DRAIN		
CH	CHILLER	RD	ROOF DRAIN
CHWR	CHILLED WATER RETURN	REF	REFRIGERANT
CHWS	CHILLED WATER SUPPLY		
CR	CONDENSATE RETURN	SAN	SANITARY SEWER
		SD	STORM DRAIN
DS	DUCT SILENCER		
DX	DIRECT EXPANSION	V	VENT
		VAV	VARIABLE AIR VOLUME
EF	EXHAUST FAN	VTR	VENT THRU ROOF
FS	FIRE SPRINKLER	W	POTABLE WATER
G	NATURAL GAS		

GENERAL NOTE:

1. THIS IS A STANDARD LEGEND SHEET, THERFORE, SOME SYMBOLS OR ABBREVIATIONS MAY APPEAR ON THIS SHEET AND NOT ON THE PLANS.

REUSE OF DOCUMENTS: THIS DOCUMENT, AND THE IDEAS AND DESIGNS INCORPORATED HEREIN, AS AN INSTRUMENT OF PROFESSIONAL SERVICE, IS THE PROPERTY OF CH2M HILL AND IS NOT TO BE USED, IN WHOLE OR IN PART, FOR ANY OTHER PROJECT WITHOUT THE WRITTEN AUTHORIZATION OF CH2MHILL.

©CH2M HILL

BID DOCUMENTS

DSGN M.H.PRATT					
DR M.A.REICHERT					
CHK M.RAHMAN					
APVD K.K.HARGREAVES	NO.	DATE	REVISION	BY	APVD

VERIFY SCALE: BAR IS ONE INCH ON ORIGINAL DRAWING. 0 — 1". IF NOT ONE INCH ON THIS SHEET, ADJUST SCALES ACCORDINGLY.

CH2MHILL

126 ARW ILLINOIS AIR NATIONAL GUARD
SCOTT AIR FORCE BASE, IL
PROJECT NUMBER VDYF989075
KC-135 FLIGHT TRAINING UNIT

GENERAL

BUILDING SERVICES LEGEND

SHEET	5
DWG	G-5
DATE	MAY 2001
PROJ	160085.B1

FILENAME: 0085g05d.dlv PLOT DATE: 18-JUL-2001 PLOT TIME: 07:15:25

ELECTRICAL LEGEND

SYMBOL	DESCRIPTION
	CONNECTION POINT TO EQUIPMENT SPECIFIED. FURNISHED AND INSTALLED UNDER OTHER DIVISIONS. RACEWAY, CONDUCTOR AND CONNECTION SPECIFIED IN DIVISION 16. COORDINATE FINAL CONNECTION WITH EQUIPMENT SUPPLIER.
MCC–A	MAJOR ELECTRICAL COMPONENT OR DEVICE – NAME OR IDENTIFYING SYMBOL AS SHOWN.
	BRANCH CIRCUIT PANELBOARD
UH	UNIT HEATER
TTC	TELEPHONE TERMINAL CABINET
CTC	COMPUTER TERMINAL CABINET
TJB	TERMINAL JUNCTION BOX
M	MOTOR, SQUIRREL CAGE INDUCTION, HORSEPOWER INDICATED ON ONE–LINE DIAGRAM, (M) SHOWN ON PLANS
1	LUMINAIRE, SEE SCHEDULE
2	LUMINAIRE, SEE SCHEDULE
3	LUMINAIRE, UNSWITCHED, SEE SCHEDULE
4	LUMINAIRE AND POLE, SEE SCHEDULE
5	WALL MOUNTED LUMINAIRE, SEE SCHEDULE
6	EMERGENCY LIGHTING UNIT
	EXIT LIGHTS, SEE SCHEDULE
Sa or 2a	SMALL LETTER SUBSCRIPT AT SWITCH AND LUMINAIRE INDICATES SWITCHING. SUBSCRIPT NUMBER AT LUMINAIRE INDICATES CIRCUIT IN PANELBOARD.
LA–2	HOME RUN – DESTINATION SHOWN
or G	EXPOSED CONDUIT AND CONDUCTORS*
or G	CONCEALED CONDUIT AND CONDUCTORS*

NOTE:
* ALL UNMARKED CONDUIT RUNS CONSIST OF TWO NO.12 CONDUCTORS IN CONDUIT. RUNS MARKED WITH CROSSHATCHES INDICATE NUMBER OF NO. 12 CONDUCTORS. CROSSHATCH WITH SUBSCRIPT "G" INDICATES GREEN GROUND WIRE. SIZE CONDUIT ACCORDING TO SPECIFICATIONS AND APPLICABLE CODE.

SYMBOL	DESCRIPTION
[ ]	CIRCUIT CALLOUT, [1"C,3#8,1#10G] CONDUIT, CONDUCTOR, AND NUMBER INDICATED. [2–3"C,3–350 KCMIL, 1#1/0G EA]; INDICATES TWO CONDUITS, EACH WITH CONDUCTORS INDICATED.
	GROUND TEST WELL
	CROSSHATCHES WITH BAR INDICATE #10 CONDUCTOR. SIZE CONDUIT ACCORDING TO SPECIFICATIONS AND APPLICABLE CODE.
	CONDUIT DOWN
	CONDUIT UP
	CONDUIT, STUBBED AND CAPPED AS SHOWN
B	BUS DUCT, SEE SPECIFICATIONS
CE	CONCRETE ENCASED CONDUIT
DB	DIRECT BURIED CONDUIT
G	GROUND
P	TRENCHING FOR UTILITY COMPANY PRIMARY POWER CKTS
T	TRENCHING FOR TELEPHONE COMPANY CIRCUITS
S	SWITCH:

WALL SWITCH:
- 2– DOUBLE POLE
- 3– THREE WAY
- 4– FOUR WAY
- CRE–CORROSION RESISTANT
- D– DIMMER
- K– KEY OPERATED
- P– PILOT LIGHT
- WP–WEATHERPROOF

MOTOR SWITCH:
- M– MOTOR RATED TOGGLE SWITCH WITHOUT OVERLOADS
- MS–MANUAL MOTOR STARTER WITH OVERLOADS

SYMBOL	DESCRIPTION
	CONVENIENCE RECEPTACLE – DUPLEX UNLESS SPECIFIED OTHERWISE WP–WEATHERPROOF C– CLOCK HANGER TL– TWIST LOCK CRE–CORROSION RESISTANT
	QUADRUPLEX RECEPTACLE
30	RECEPTACLE – 240V, 1PH, AMPERAGE INDICATED
30	RECEPTACLE, SPECIAL PURPOSE – AMPERAGE INDICATED
	DUPLEX CONVENIENCE RECEPTACLE – FLUSH IN FLOOR
	COMMUNICATION RECEPTACLE (2 VOICE & 4 DATA) FLUSH IN FLOOR
	TELEPHONE RECEPTACLE (OUTLET BOX ONLY) FLUSH IN FLOOR
W	TELEPHONE RECEPTACLE (WALL MOUNT)
	COMMUNICATION RECEPTACLE (2 VOICE & 4 DATA)
TV	TELEVISION RECEPTACLE (CATV OR CCTV)
HH	GENERAL CONTROL OR WIRING DEVICE. LETTER SYMBOLS OR ABBREVIATIONS INDICATE TYPE OF DEVICE.
CS	CONTROL STATION, SEE CONTROL DIAGRAMS FOR TYPE.
J	CONDUIT FITTING OR JUNCTION BOX
30	NONFUSED DISCONNECT SWITCH, SIZE INDICATED, 3 POLE UNLESS INDICATED OTHERWISE.
60/40 F	FUSED DISCONNECT SWITCH, SIZE INDICATED (60/40, 60 = SWITCH RATING: 40 = FUSE RATING) 3 POLE UNLESS INDICATED OTHERWISE.
CB 30	CIRCUIT BREAKER, SIZE INDICATED
2	CONTACTOR, MAGNETIC, NEMA SIZE INDICATED.
30 L	LIGHTING CONTACTOR, CURRENT RATING INDICATED. FOR NUMBER OF POLES, SEE CONTROL DIAGRAM.
2	STARTER MAGNETIC NEMA SIZE INDICATED, SEE CONTROL DIAGRAM.
2	COMBINATION (FUSE OR CIRCUIT BREAKER AS INDICATED) MAGNETIC STARTER, NEMA SIZE INDICATED, SEE CONTROL DIAGRAM.
	METERING FACILITIES
TV	TELEVISION CAMERA
	GROUND ROD
	MULTI–PARTY DESK TOP COMMUNICATIONS SYSTEM STATION WITH REMOTE AMPLIFIER
W	MULTI–PARTY WALL MOUNTED COMMUNICATIONS SYSTEM STATION WITH INTEGRAL AMPLIFIER
	CONE TYPE PAGING SPEAKER, CEILING MOUNTED
	INTERIOR PAGING TRUMPET SPEAKER, SURFACE MOUNTED.
	OUTDOOR PAGING TRUMPET SPEAKER, SURFACE MOUNTED.
FACP	FIRE ALARM CONTROL PANEL
FAAP	FIRE ALARM ANNUNCIATOR PANEL
M	MONOCO RADIO TRANSMITTER
F	FIRE ALARM STATION, MANUAL
F	FIRE ALARM BELL
F	FIRE ALARM HORN
ST	FIRE ALARM COMBINATION STROBE/HORN
FI	FIRE ALARM IONIZATION DETECTOR
I	AIR DUCT IONIZATION DETECTOR
FA	FIRE ALARM STATION, AUTOMATIC, HEAT DETECTOR

SYMBOL	DESCRIPTION
1	CONTACT – NORMALLY OPEN WITH NEMA SIZE INDICATED AS APPLICABLE
	CONTACT – NORMALLY CLOSED
	OVERLOAD RELAY HEATER
1	MAGNETIC STARTER WITH NEMA SIZE INDICATED
100/M	CIRCUIT BREAKER, MAGNETIC TRIP ONLY, FRAME SIZE SHOWN, 3 POLE UNLESS INDICATED OTHERWISE.
400	CIRCUIT BREAKER, THERMAL MAGNETIC TRIP SHOWN, 3 POLE UNLESS INDICATED OTHERWISE.
100	SWITCH – CURRENT RATING INDICATED, 3 POLE UNLESS INDICATED OTHERWISE.
225	FUSE – RATING INDICATED
	DRAWOUT CIRCUIT BREAKER, LOW VOLTAGE
	DRAWOUT CIRCUIT BREAKER, MEDIUM VOLTAGE
	DRAWOUT FUSED SWITCH, MEDIUM VOLTAGE
	SURGE ARRESTER
C10	CAPACITOR – KVAR INDICATED
VS V 0–600V	METER WITH SWITCH – SCALE RANGE SHOWN
	GROUND
120V or	TRANSFORMER, SECONDARY VOLTAGES, PHASE AND RATING INDICATED AS APPLICABLE 120/240V 15 KVA, 1PH
GFR 25A 0.1	PICK–UP SETTING TIME CURRENT CHARACTERISTIC } GROUND FAULT RELAY WITH CT
	PUSH–BUTTON SWITCH, MUSHROOM HEAD, MAINTAINED CONTACT
	PUSH–BUTTON SWITCH, MOMENTARY CONTACT, NORMALLY OPEN
	PUSH–BUTTON SWITCH, MOMENTARY CONTACT, NORMALLY CLOSED
	PUSH–BUTTON SWITCH, MAINTAINED CONTACTS WITH MECHANICAL INTERLOCK
	NORMALLY CLOSED, TIME DELAY OPENING
	NORMALLY CLOSED, TIME DELAY CLOSING
	NORMALLY OPEN, TIME DELAY CLOSED
	NORMALLY OPEN, TIME DELAY OPEN
	REMOTE DEVICE
O H A	SELECTOR SWITCH – MAINTAINED CONTACT – CHART IDENTIFIES OPERATION:

	POSITION		
CKT	HAND	OFF	AUTO
1	X	O	O
2	O	O	X

X – CLOSED CONTACT
O – OPEN CONTACT

SYMBOL	DESCRIPTION
(3)	CURRENT TRANSFORMER, NUMBER INDICATED
A	INDICATING LIGHT, PUSH–TO–TEST, LETTER INDICATES COLOR
A	INDICATING LIGHT – LETTER INDICATES COLOR A – AMBER G – GREEN B – BLUE R – RED C – CLEAR W – WHITE

ABBREVIATIONS

ABBREVIATIONS	DESCRIPTION
A	AMMETER, AMPERE, AMBER
AF	AMPERE FRAME
AFD	ADJUSTABLE FREQUENCY DRIVE
AFF	ABOVE FINISHED FLOOR
AFG	ABOVE FINISHED GRADE
AS	AMMETER SWITCH, AMPERE SENSOR
ASU	AIR SUPPLY UNIT
AT	AMPERE TRIP
ATC	AUTOMATIC THROWOVER CONTROL
ATS	AUTOMATIC TRANSFER SWITCH
BC	BARE COPPER
BRKR	BREAKER
BUP	BACK UP PANEL
C	CONDUIT, CONTACTOR
CB	CIRCUIT BREAKER
CC	CONTROL CABLE
CKT	CIRCUIT
CPT	CONTROL POWER TRANSFORMER
CR	CONTROL RELAY
CRE	CORROSION–RESISTANT
CRS	COATED RIGID STEEL CONDUIT
CT	CURRENT TRANSFORMER
DC	DIRECT CURRENT
DIV	DIVISION
E	EMPTY
EHH	ELECTRIC HAND HOLD
EO	ELECTRIC OPERATOR
EQPT	EQUIPMENT
ESS	EMERGENCY SHUTDOWN SWITCH
ETM	ELAPSED TIME METER
EXST	EXISTING
FDR	FEEDER
F	FUSE
FLR	FLOOR
FLUOR	FLUORESCENT
FO	FIBER OPTIC
FVNR	FULL VOLTAGE NON–REVERSING
FVR	FULL VOLTAGE REVERSING
G	GREEN, GROUND
GALV	GALVANIZED
GFCI	GROUND FAULT CIRCUIT INTERRUPTER 5MA
GFI	GROUND FAULT INTERRUPTER–EQUIPMENT–30MA
GFR	GROUND FAULT RELAY
GND	GROUND
H	HIGH SPEED
HH	HANDHOLE
HID	HIGH INTENSITY DISCHARGE
HPS	HIGH PRESSURE SODIUM
HS	HAND SWITCH
IC	INTERRUPTING CAPACITY
I & C	INSTRUMENTATION AND CONTROL
INCAND	INCANDESCENT
INST	INSTANTANEOUS
J, J–BOX	JUNCTION BOX
K	KEY INTERLOCK

ABBREVIATIONS	DESCRIPTION
L	LIGHTING CONTACTOR, LOW SPEED
LOS	LOCKOUT STOP PUSH BUTTON
LR	LATCHING RELAY
LT FLEX	LIQUID TIGHT FLEX CONDUIT
LTS	LIGHTS
M	MAGNETIC CONTACTOR COIL
MCC	MOTOR CONTROL CENTER
MH	MANHOLE, METAL HALIDE
MO	MOTOR OPERATOR
MS	MOTOR STARTER
MT	MOUNT
MTD	MOUNTED
N	NEUTRAL
NA	NON–AUTOMATIC
NC	NORMALLY CLOSED
NL	NIGHT LIGHT
NO	NORMALLY OPEN
NP	NAMEPLATE
OC	ON CENTER
OL	OVERLOAD RELAY
PB	PULL BOX, PUSH BUTTON SWITCH
PC	PHOTOCELL
PH	PHASE
PMR	PHASE MONITOR RELAY
PNL	PANEL
PS	PRESSURE SWITCH
PT	POTENTIAL TRANSFORMER
PVC	POLYVINYL CHLORIDE CONDUIT
R	RED
RCPT	RECEPTACLE
REQD	REQUIRED
RM	REMOTE MULTIPLEXER
RS	RIGID STEEL CONDUIT
RT	REMOTE TELEMETRY
RVNR	REDUCED VOLTAGE NON–REVERSING
RVR	REDUCED VOLTAGE REVERSING
SA	SURGE ARRESTOR
SCCR	SHORT CIRCUIT CURRENT RATING
S/N	SOLID NEUTRAL
SPD	SPEED
SST	STAINLESS STEEL
SV	SOLENOID VALVE
SW	SWITCH
T	THERMOSTAT
TB	TERMINAL BOARD
TC	TIME CLOSE
TD	TEMPERATURE DETECTOR RELAY
TDR	TIME DELAY RELAY
TJB	TERMINAL JUNCTION BOX
T.O.	TIME OPEN
TS	AUTO TRANSFORMER TEMPERATURE SWITCH
TSP	TWISTED SHIELDED PAIR
TST	TWISTED SHIELDED TRIAD
TYP	TYPICAL
UH	UNIT HEATER
UVR	UNDER VOLTAGE RELAY
V	VOLTMETER, VOLT
VS	VOLTMETER SWITCH
W	WATT
WHD	WATT HOUR DEMAND METER
WP	WEATHERPROOF
XFDR	TRANSPONDER
XFMR	TRANSFORMER

NOTES:
1. THIS IS A STANDARD LEGEND SHEET. SOME SYMBOLS OR ABBREVIATIONS MAY APPEAR ON THIS DRAWING AND NOT ON THE PLANS.
2. FOR ADDITIONAL ABBREVIATIONS OF OTHER DIVISIONS SUCH AS HVAC, MECHANICAL, OR STRUCTURAL/ARCHITECTURAL, SEE OTHER LEGEND SHEETS.

REUSE OF DOCUMENTS: THIS DOCUMENT, AND THE IDEAS AND DESIGNS INCORPORATED HEREIN, AS AN INSTRUMENT OF PROFESSIONAL SERVICE, IS THE PROPERTY OF CH2M HILL AND IS NOT TO BE USED, IN WHOLE OR IN PART, FOR ANY OTHER PROJECT WITHOUT THE WRITTEN AUTHORIZATION OF CH2MHILL.
©CH2M HILL

BID DOCUMENTS

DSGN	B.W.WILLIAMS
DR	M.A.REICHERT
CHK	R.E.NAGEL
APVD	K.K.HARGREAVES

NO.	DATE	REVISION	BY	APVD

VERIFY SCALE
BAR IS ONE INCH ON ORIGINAL DRAWING.
0 1"
IF NOT ONE INCH ON THIS SHEET, ADJUST SCALES ACCORDINGLY.

CH2MHILL

126 ARW ILLINOIS AIR NATIONAL GUARD
SCOTT AIR FORCE BASE, IL
PROJECT NUMBER VDYF989075
KC–135 FLIGHT TRAINING UNIT

GENERAL
ELECTRICAL LEGEND

SHEET 6
DWG G–6
DATE MAY 2001
PROJ 160085.B1

FILENAME: 0085g06d.dlv PLOT DATE: 18–JUL–2001 PLOT TIME: 07:17:39

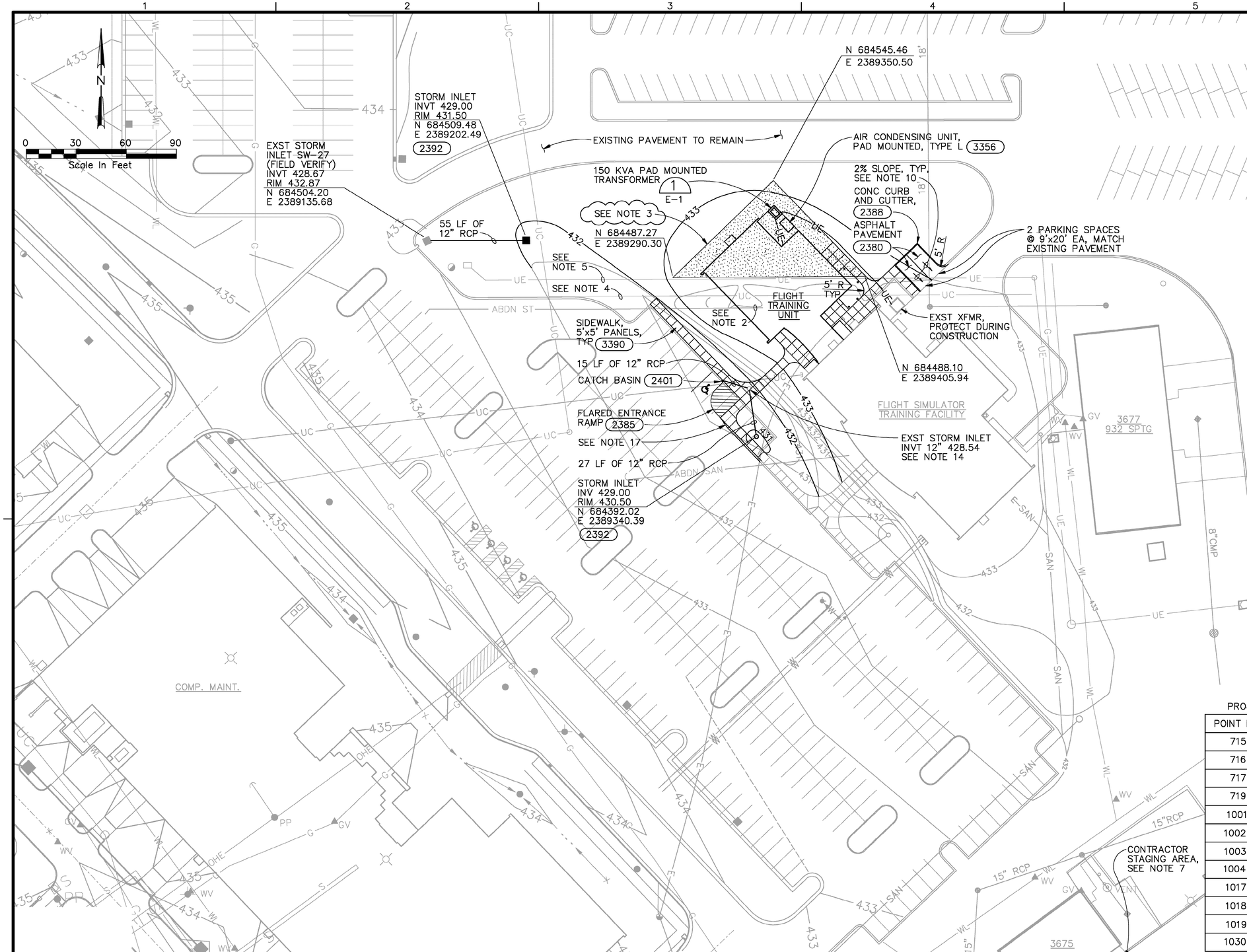

NOTES:

1. EXISTING SITE CONDITIONS SHOWN NORTH OF THE FLIGHT SIMULATOR TRAINING FACILITY ARE BASED ON "DEMOLISH PAVEMENTS" CONTRACT COMPLETION.
2. REMOVE ABANDONED STORM DRAIN WITHIN THE BUILDING FOOTPRINT AND MINIMUM OF 10 FEET BEYOND LIMITS OF BUILDING. PLUG ABANDONED STORM PIPE WITH CONCRETE 5 FEET FROM END OF PIPE.
3. REMOVE UNCONTROLLED DEBRIS FILL IN THIS AREA AND AT A MINIMUM DEPTH OF 2 FEET OR AS DIRECTED BY THE GOVERNMENT. REPLACE WITH IMPORTED STRUCTURAL FILL MATERIAL.
4. PLACE PVC PROTECTIVE CASING AROUND UNDERGROUND COMMUNICATION LINE (UC) WITHIN BUILDING FOOTPRINT AND 10 FEET BEYOND BUILDING LIMITS.
5. PLACE PVC PROTECTIVE CASING AROUND UNDERGROUND ELECTRICAL LINE (UE) WITHIN BUILDING FOOTPRINT AND 10 FEET BEYOND BUILDING LIMITS.
6. EXISTING UTILITIES SHOWN ARE BASED ON A COMBINATION OF AS-BUILT DRAWINGS PROVIDED BY SCOTT AFB AND FIELD LOCATED PERFORMED BY DAVID MASON & ASSOCIATES. THE ENGINEER TAKES NO RESPONSIBILITY FOR THE COMPLETENESS AND/OR ACCURACY OF THE LOCATION SHOWN OR ELEVATIONS DEPICTED FOR EXISTING UTILITIES. CONTRACTOR SHALL VERIFY ALL UTILITY LOCATIONS AND BURY DEPTHS PRIOR TO CONSTRUCTION. ALL UTILITIES DAMAGED BY THE CONTRACTOR SHALL BE REPAIRED OR REPLACED BY THE CONTRACTOR AS NOTED IN THE CONTRACT DOCUMENTS.
7. CONTRACTOR STAGING AREA LOCATED ON EASTERN HALF OF PAVED LOT SOUTH OF BUILDING 3675. COORDINATE WITH CONTRACTING OFFICER FOR EXACT LOCATION.
8. MAPPING USED FOR THE DEVELOPMENT OF BASE SHEETS IS BASED ON APRIL 1997 AERIAL PHOTOGRAPHY AND 1"=50' PHOTAGRAMMETRIC MAPPING PREPARED BY WALKER AND ASSOCIATES, SUPPLEMENTED WITH FIELD SURVEY WORK PERFORMED DURING SPRING AND SUMMER 1997 AND SUMMER 1999 BY DAVID MASON & ASSOCIATES.
9. PROVIDE SOIL EROSION AND SEDIMENT ACTION CONTROL FEATURES AS NOTED AND DESCRIBED ON DRAWING D-1.
10. SLOPE PAVEMENT INCLUDING ASPHALT AND SIDEWALKS AWAY FROM BUILDINGS AT 2% TYPICAL SLOPE UNLESS SHOWN OTHERWISE. MATCH GRADE WHERE NEW PAVEMENT TIES INTO EXISTING PAVEMENT.
11. FTU BUILDING PERIMETER LINES TO MATCH EXISTING FLIGHT SIMULATOR FACILITY BUILDING. SEE ARCHITECTURAL AND STRUCTURAL DRAWINGS.
12. MATCH FTU FINISHED FLOOR ELEVATION WITH FLIGHT SIMULATOR TRAINING FACILITY FINISHED FLOOR ELEVATION. SLOPE EXTERIOR GRADES AWAY FROM BUILDINGS AT A 2% TYPICAL SLOPE UNLESS SHOWN OTHERWISE.
13. HORIZONTAL AND VERTICAL CONTROL BASED ON SCOTT JOINT-USE DATUM.
14. FIELD VERIFY RIM ELEVATION AND ADJUST RIM TO MATCH SIDEWALK GRADE. REPLACE CAST OPEN LID WITH CAST CLOSED LID.
15. HIGH PRESSURE GAS SERVICE AND GAS METER SHALL BE PROVIDED BY ILLINOIS POWER. SEE DRAWING H-1.
16. FOR PIPE TRENCH REQUIREMENTS, SEE (2310).
17. REMOVE 5 EXISTING PARKING SPACES, CURBING AND STRIPING. INSTALL NEW SIDEWALK AND TIE INTO EXISTING SIDEWALK AS SHOWN.

PROJECT HORIZONTAL CONTROL POINTS AND PROJECT BENCHMARKS:

POINT NO	NORTHING	EASTING	ELEV	DESCRIPTION
715	685090.46	2387697.76	437.73	MONUMENT
716	685113.01	2389887.89	426.40	AL TAB
717	683438.98	2389827.75	430.69	AL TAB
719	682414.42	2388857.35	434.58	AL TAB
1001	681670.72	2389595.21	433.48	"X" ON MH RIM
1002	681043.80	2390167.29	433.81	"X" ON MH RIM
1003	680593.81	2390635.72	434.93	MONUMENT IN CONC
1004	679743.79	2391172.89		IRON ROD
1017	685819.46	2386640.62		IRON ROD
1018	685746.25	2388466.73		IRON ROD
1019	685141.91	2388474.98		IRON ROD
1030	685530.15	2386702.05	441.53	AL TAB

DSGN S.M.BRUER					
DR M.A.REICHERT					
CHK C.G.BARNETT					
APVD K.K.HARGREAVES	NO.	DATE	REVISION	BY	APVD

VERIFY SCALE
BAR IS ONE INCH ON ORIGINAL DRAWING.
0 1"
IF NOT ONE INCH ON THIS SHEET, ADJUST SCALES ACCORDINGLY.

CH2MHILL

126 ARW ILLINOIS AIR NATIONAL GUARD
SCOTT AIR FORCE BASE, IL
PROJECT NUMBER VDYF989075
KC-135 FLIGHT TRAINING UNIT

CIVIL/SITEWORK

SITE PLAN

SHEET 7
DWG C-1
DATE MAY 2001
PROJ 160085.B1

FILENAME: 0085c01d.dlv PLOT DATE: 18-JUL-2001 PLOT TIME: 07:18:54

BID DOCUMENTS

REUSE OF DOCUMENTS: THIS DOCUMENT, AND THE IDEAS AND DESIGNS INCORPORATED HEREIN, AS AN INSTRUMENT OF PROFESSIONAL SERVICE, IS THE PROPERTY OF CH2M HILL AND IS NOT TO BE USED, IN WHOLE OR IN PART, FOR ANY OTHER PROJECT WITHOUT THE WRITTEN AUTHORIZATION OF CH2MHILL.
©CH2M HILL

PLANTING SCHEDULE

KEY	COMMON NAME	BOTANICAL NAME	CONDITION	PLANTING SIZE	TOTAL
SMALL ORNAMENTAL					
RB	REDBUD	CERCIS CANADENSIS	B & B	2" CALIPER	14
CA	ADAM'S CRABAPPLE	MALUS X SPP 'ADAMS'	B & B	2" CALIPER	2
LARGE SHRUBS					
RDW	REDOSIER DOGWOOD	CORNUS SERICEA	CONT	#5	2
AVB	ARROWWOOD VIBURNUM	VIBURNUM DENTATUM	CONT	#5	2
SMALL SHRUBS					
CJP	CHINESE JUNIPER	JUNIPERUS CHINENSIS	CONT	#3	33
PERENNIALS					
DAY	DAY LILLY "STELLA D'ORO"		CONT		8

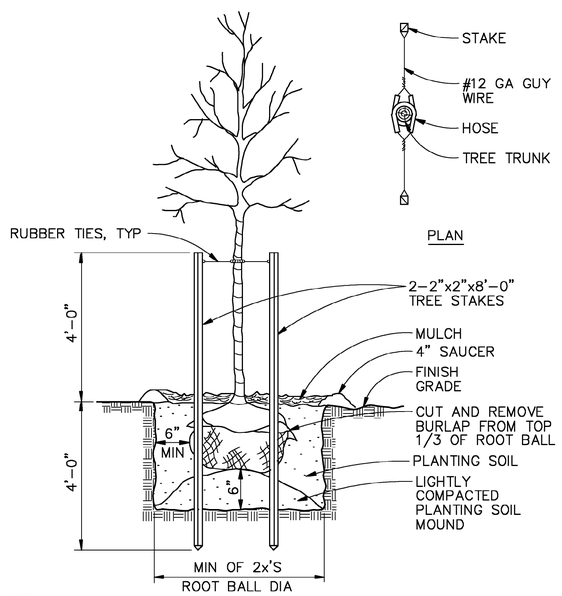

NOTE:

TREE SHALL BEAR SAME RELATION TO FINISH GRADE AS IT BORE TO PREVIOUS GRADE.

TREE PLANTING AND STAKING

NTS

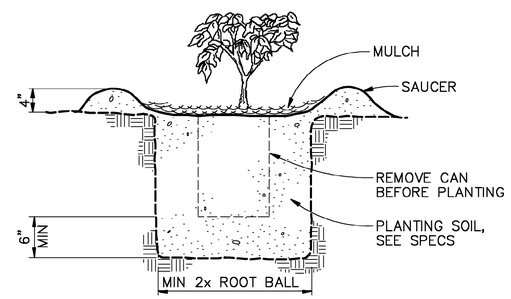

PLANTING SHRUBS FROM CONTAINER

NTS

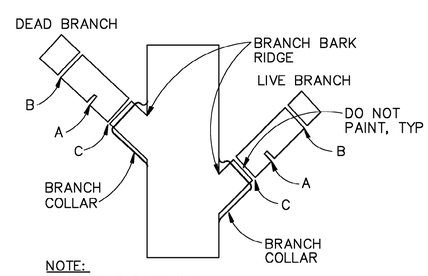

NOTE:

FIRST, CUT PART WAY THROUGH THE BRANCH AT A; THEN CUT IT OFF AT B. MAKE THE FINAL CUT AT C.

PRUNING DETAIL

NTS

PLANTING NOTES:

1. AT LEAST ONE TREE OF EACH SPECIES DELIVERED TO THE SITE WILL HAVE AN IDENTIFICATION TAG FROM THE SUPPLYING NURSERY SHOWING COMMON AND BOTANICAL PLANT NAMES. ALL TREES SHALL BE PROTECTED AGAINST HEAT, SUN, WIND AND FROST DURING TRANSPORTATION TO THE SITE AND WHILE BEING HELD AT THE SITE. DO NOT STORE TREES IN TOTAL DARKNESS MORE THAN ONE DAY.
2. DO NOT DAMAGE TREE ROOT BALL DURING TRANSPORTATION OR PLANTING PROCESS.
3. CONTRACTOR SHALL NOTIFY THE COTR AT THE TIME OF DELIVERY OF ANY TREE THAT IS DAMAGED OR IN POOR CONDITION TO DETERMINE ACCEPTABILITY.
4. TREES SHALL BE INSPECTED BY THE COTR BEFORE PLANTING. TREES MAY BE REJECTED AT ANY TIME DUE TO CONDITION, FORM OR DAMAGE BEFORE OR AFTER PLANTING.
5. THE CONTRACTOR SHALL COORDINATE THIS WORK WITH THE OTHER TRADES AND MAINTAIN DRAINAGE DURING CONSTRUCTION.
6. INSTALL ALL TREES IN ACCORDANCE WITH DETAILS. ALL FINISH GRADING AND PLANTING OPERATIONS SHALL BE CARRIED OUT IN ACCORDANCE WITH PROJECT SPECIFICATIONS.
7. ALL TREE TYING MATERIAL AND MARKING TAPES SHALL BE REMOVED AT THE TIME OF PLANTING.
8. THE TREE PLANS ARE DIAGRAMMATIC. TREES SHALL BE SPOTTED APPROXIMATELY AS SHOWN ON THE LANDSCAPE DRAWING AND ARE TO BE APPROVED BY THE COTR BEFORE BEING REMOVED FROM CONTAINERS AND EXCAVATING SOIL FOR PLANTING.
9. ALL TREES SHALL BE SINGLE TRUNK STANDARDS UNLESS OTHERWISE NOTED.
10. CONTRACTOR SHALL STAKE ALL TREES AS SHOWN PERPENDICULAR TO PREVAILING WIND. CONTRACTOR SHALL INSTALL A 3" LAYER OF MULCH (SEE SPECS) IN ALL GROUNDCOVER/SHRUB AREAS.
11. THE MAINTENANCE PERIOD WILL BEGIN ONLY UPON ACCEPTANCE OF THE COMPLETED PLANTED AREAS BY THE CONTRACTING OFFICER.
12. CONTRACTOR SHALL PROTECT EXISTING VEGETATION OUTSIDE THE LIMITS OF GRADING.
13. ANY EXISTING LANDSCAPE OR ANY OTHER FACILITIES INDICATED ON THE APPROVED PLANS THAT ARE DAMAGED OR REMOVED DURING DEMOLITION OR CONSTRUCTION SHALL BE REPAIRED AND/OR REPLACED IN KIND AND EQUIVALENT SIZE PER THE APPROVED PLANS.
14. FOLLOWING CONSTRUCTION, RE-SEED ALL DISTURBED AREAS AS REQUIRED.

©CH2M HILL
REUSE OF DOCUMENTS: THIS DOCUMENT, AND THE IDEAS AND DESIGNS INCORPORATED HEREIN, AS AN INSTRUMENT OF PROFESSIONAL SERVICE, IS THE PROPERTY OF CH2M HILL AND IS NOT TO BE USED, IN WHOLE OR IN PART, FOR ANY OTHER PROJECT WITHOUT THE WRITTEN AUTHORIZATION OF CH2MHILL.

BID DOCUMENTS

DSGN K.K.HARGREAVES					
DR M.A.REICHERT					
CHK C.G.BARNETT					
APVD K.K.HARGREAVES	NO.	DATE	REVISION	BY	APVD

VERIFY SCALE
BAR IS ONE INCH ON ORIGINAL DRAWING.
0 1"
IF NOT ONE INCH ON THIS SHEET, ADJUST SCALES ACCORDINGLY.

CH2MHILL

126 ARW ILLINOIS AIR NATIONAL GUARD
SCOTT AIR FORCE BASE, IL
PROJECT NUMBER VDYF989075
KC-135 FLIGHT TRAINING UNIT

CIVIL/SITEWORK
LANDSCAPE DETAILS

SHEET 9
DWG C-3
DATE MAY 2001
PROJ 160085.B1

FILENAME: 0085c03d.dlv PLOT DATE: 18-JUL-2001 PLOT TIME: 07:20:15

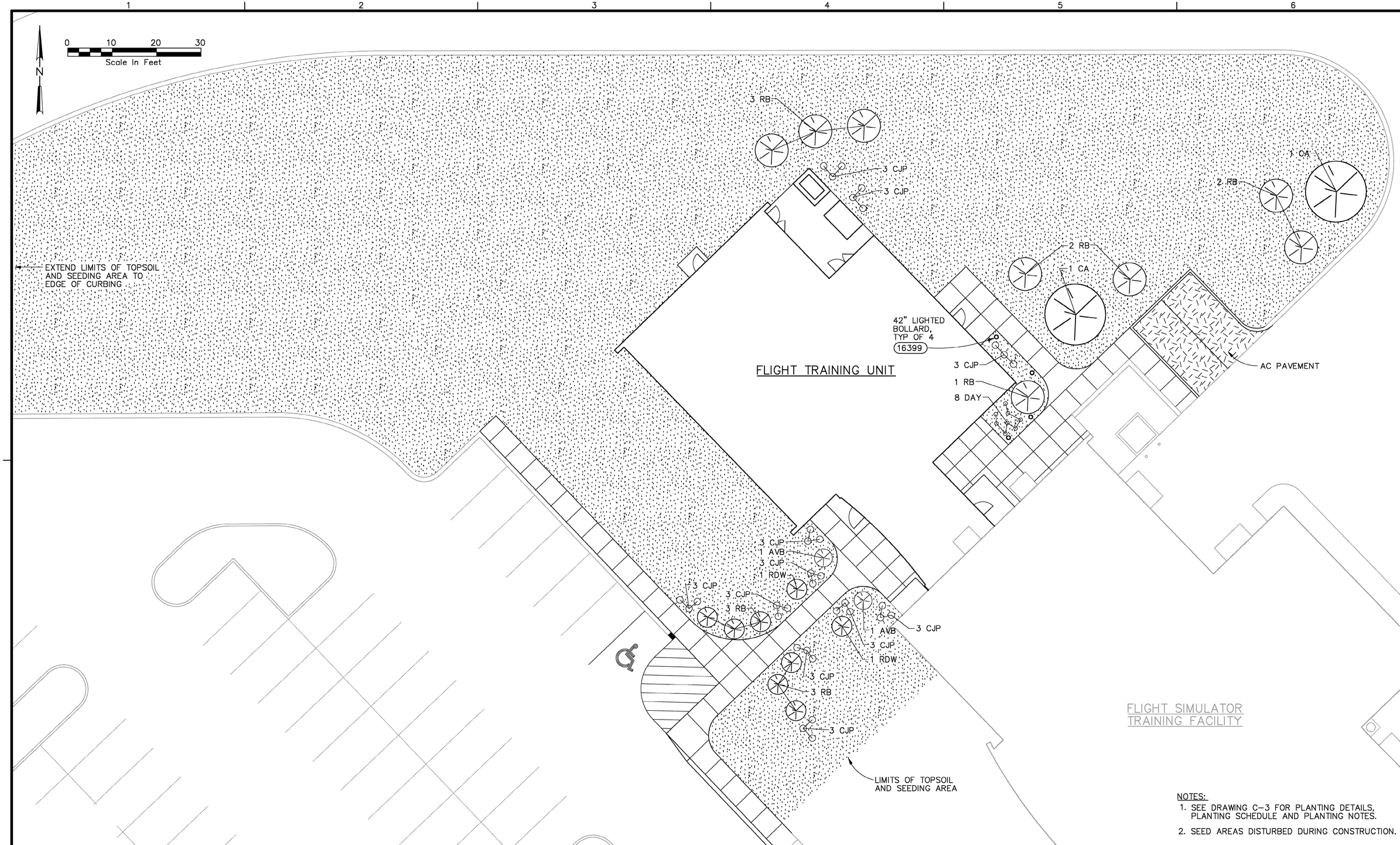

NOTES:

1. SEE DRAWING C-3 FOR PLANTING DETAILS, PLANTING SCHEDULE AND PLANTING NOTES.
2. SEED AREAS DISTURBED DURING CONSTRUCTION.

DSGN K.K.HARGREAVES						VERIFY SCALE
DR M.A.REICHERT						BAR IS ONE INCH ON ORIGINAL DRAWING. 0 1"
CHK C.G.BARNETT						IF NOT ONE INCH ON THIS SHEET, ADJUST SCALES ACCORDINGLY.
APVD K.K.HARGREAVES	NO.	DATE	REVISION	BY	APVD	

CH2MHILL

126 ARW ILLINOIS AIR NATIONAL GUARD
SCOTT AIR FORCE BASE, IL
PROJECT NUMBER VDYF989075
KC-135 FLIGHT TRAINING UNIT

CIVIL/SITEWORK

LANDSCAPE PLAN

SHEET 8
DWG C-2
DATE MAY 2001
PROJ 160085.B1

FILENAME: 0085c02d.dlv PLOT DATE: 18-JUL-2001 PLOT TIME: 07:19:35

BID DOCUMENTS

REUSE OF DOCUMENTS: THIS DOCUMENT, AND THE IDEAS AND DESIGNS INCORPORATED HEREIN, AS AN INSTRUMENT OF PROFESSIONAL SERVICE, IS THE PROPERTY OF CH2M HILL AND IS NOT TO BE USED, IN WHOLE OR IN PART, FOR ANY OTHER PROJECT WITHOUT THE WRITTEN AUTHORIZATION OF CH2MHILL.
©CH2M HILL

NOTES:

1. REMOVE WINDOW & FILL IN WALL TO MATCH EXISTING BRICK AND STONE. WEAVE BRICK AND BLOCK TO MINIMIZE APPEARANCE OF REPAIR. PAINT EXPOSED CMU TO MATCH EXISTING.
2. FOR GENERAL NOTES AND LEGEND, SEE DRAWING G-4.

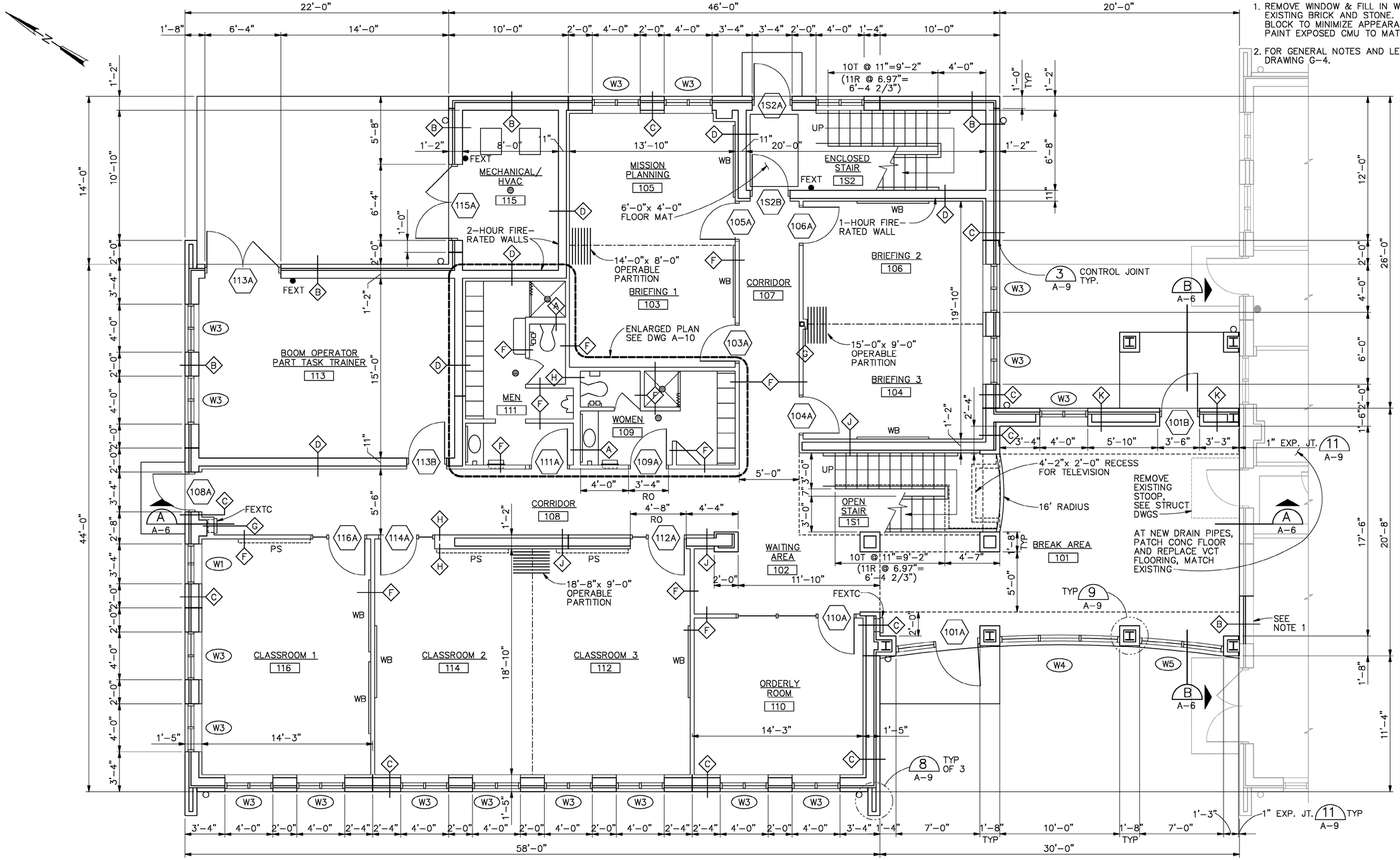

FIRST FLOOR PLAN

1/4"=1'-0"

DSGN R.G.SIEBERS					
DR R.G.SIEBERS					
CHK K.K.HARGREAVES					
APVD K.K.HARGREAVES	NO.	DATE	REVISION	BY	APVD

VERIFY SCALE
BAR IS ONE INCH ON ORIGINAL DRAWING.
0 1"
IF NOT ONE INCH ON THIS SHEET, ADJUST SCALES ACCORDINGLY.

CH2MHILL

126 ARW ILLINOIS AIR NATIONAL GUARD
SCOTT AIR FORCE BASE, IL
PROJECT NUMBER VDYF989075
KC-135 FLIGHT TRAINING UNIT

ARCHITECTURAL

FIRST FLOOR PLAN

SHEET 10
DWG A-1
DATE MAY 2001
PROJ 160085.B1

FILENAME: 0085a01d.dlv PLOT DATE: 18-JUL-2001 PLOT TIME: 07:24:26

BID DOCUMENTS

REUSE OF DOCUMENTS: THIS DOCUMENT, AND THE IDEAS AND DESIGNS INCORPORATED HEREIN, AS AN INSTRUMENT OF PROFESSIONAL SERVICE, IS THE PROPERTY OF CH2M HILL AND IS NOT TO BE USED, IN WHOLE OR IN PART, FOR ANY OTHER PROJECT WITHOUT THE WRITTEN AUTHORIZATION OF CH2MHILL.
©CH2M HILL

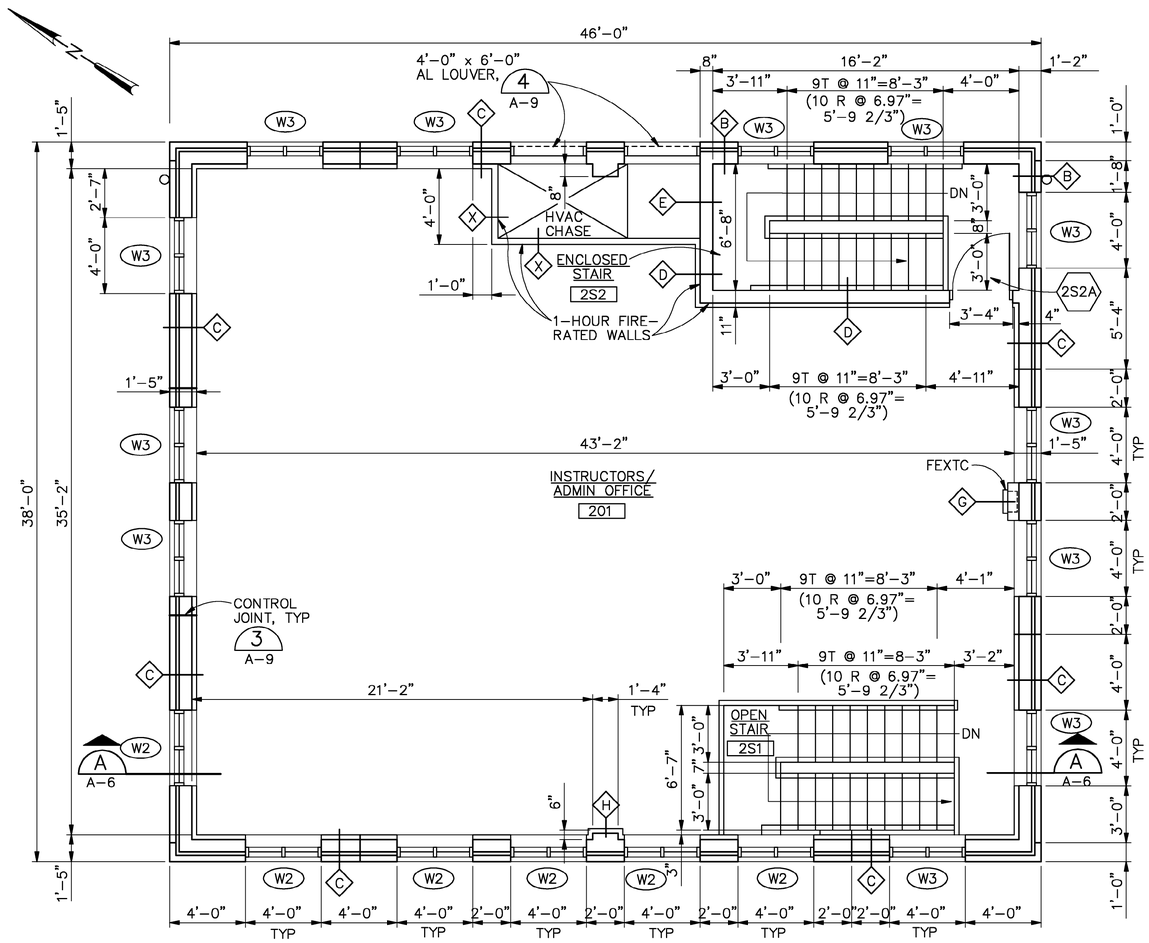

SECOND FLOOR PLAN

1/4"=1'-0"

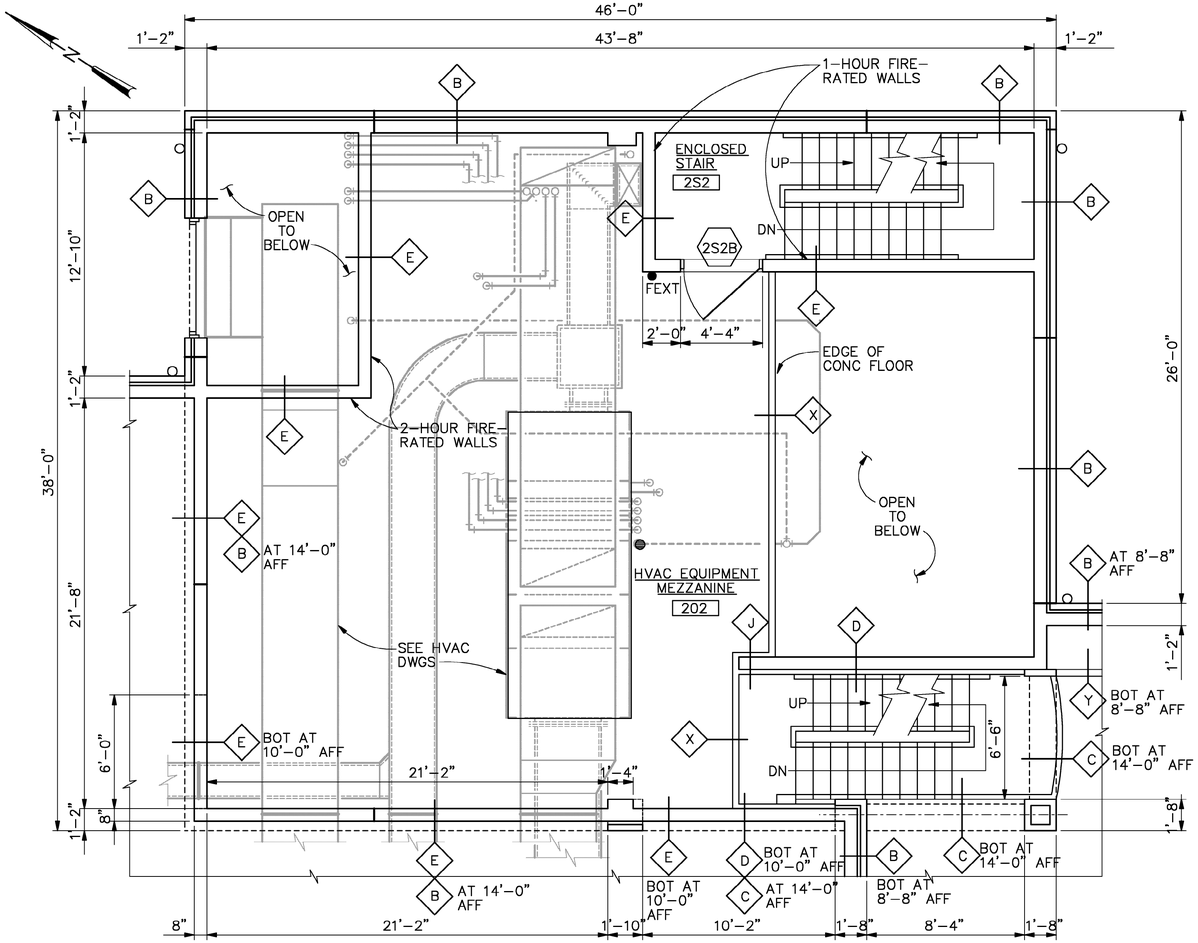

HVAC MEZZANINE PLAN

1/4"=1'-0"

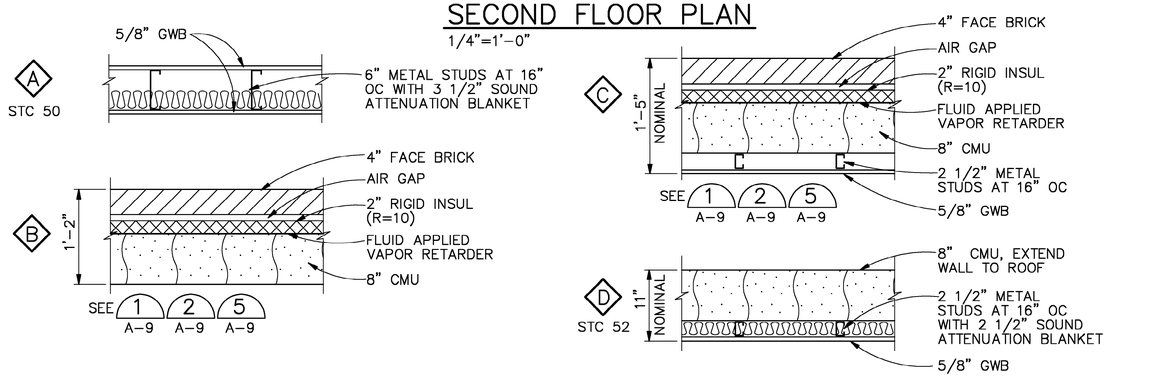

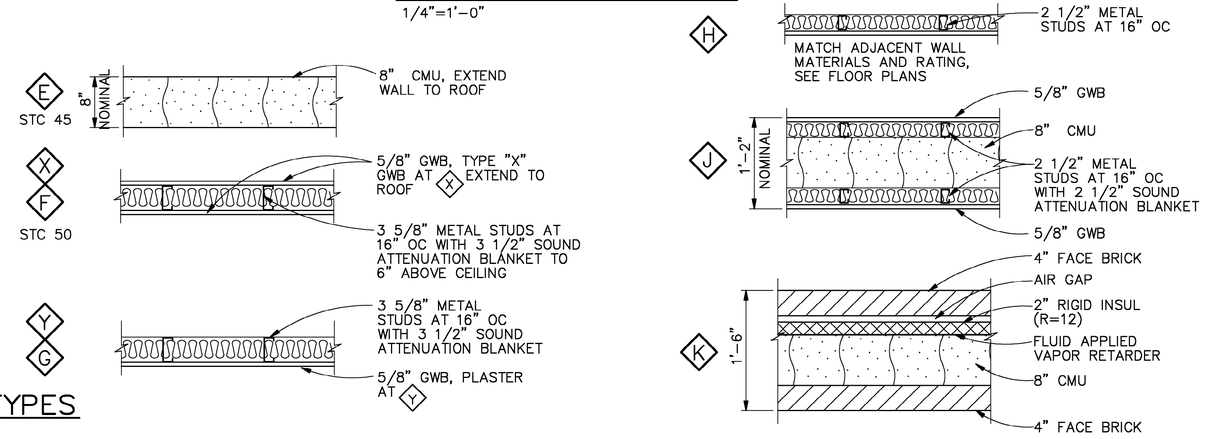

WALL TYPES

1"=1'-0"

DSGN R.G.SIEBERS						VERIFY SCALE
DR R.G.SIEBERS						BAR IS ONE INCH ON ORIGINAL DRAWING. 0 1"
CHK K.K.HARGREAVES						IF NOT ONE INCH ON THIS SHEET, ADJUST SCALES ACCORDINGLY.
APVD K.K.HARGREAVES	NO.	DATE	REVISION	BY	APVD	

CH2MHILL

126 ARW ILLINOIS AIR NATIONAL GUARD
SCOTT AIR FORCE BASE, IL
PROJECT NUMBER VDYF989075
KC-135 FLIGHT TRAINING UNIT

ARCHITECTURAL
SECOND FLOOR PLAN,
HVAC MEZZANINE PLAN
AND WALL TYPES

SHEET 11
DWG A-2
DATE MAY 2001
PROJ 160085.B1

FILENAME: 0085a02d.dlv PLOT DATE:18-JUL-2001 PLOT TIME:07:38:28

BID DOCUMENTS

REUSE OF DOCUMENTS: THIS DOCUMENT, AND THE IDEAS AND DESIGNS INCORPORATED HEREIN, AS AN INSTRUMENT OF PROFESSIONAL SERVICE, IS THE PROPERTY OF CH2M HILL AND IS NOT TO BE USED, IN WHOLE OR IN PART, FOR ANY OTHER PROJECT WITHOUT THE WRITTEN AUTHORIZATION OF CH2MHILL.
©CH2M HILL

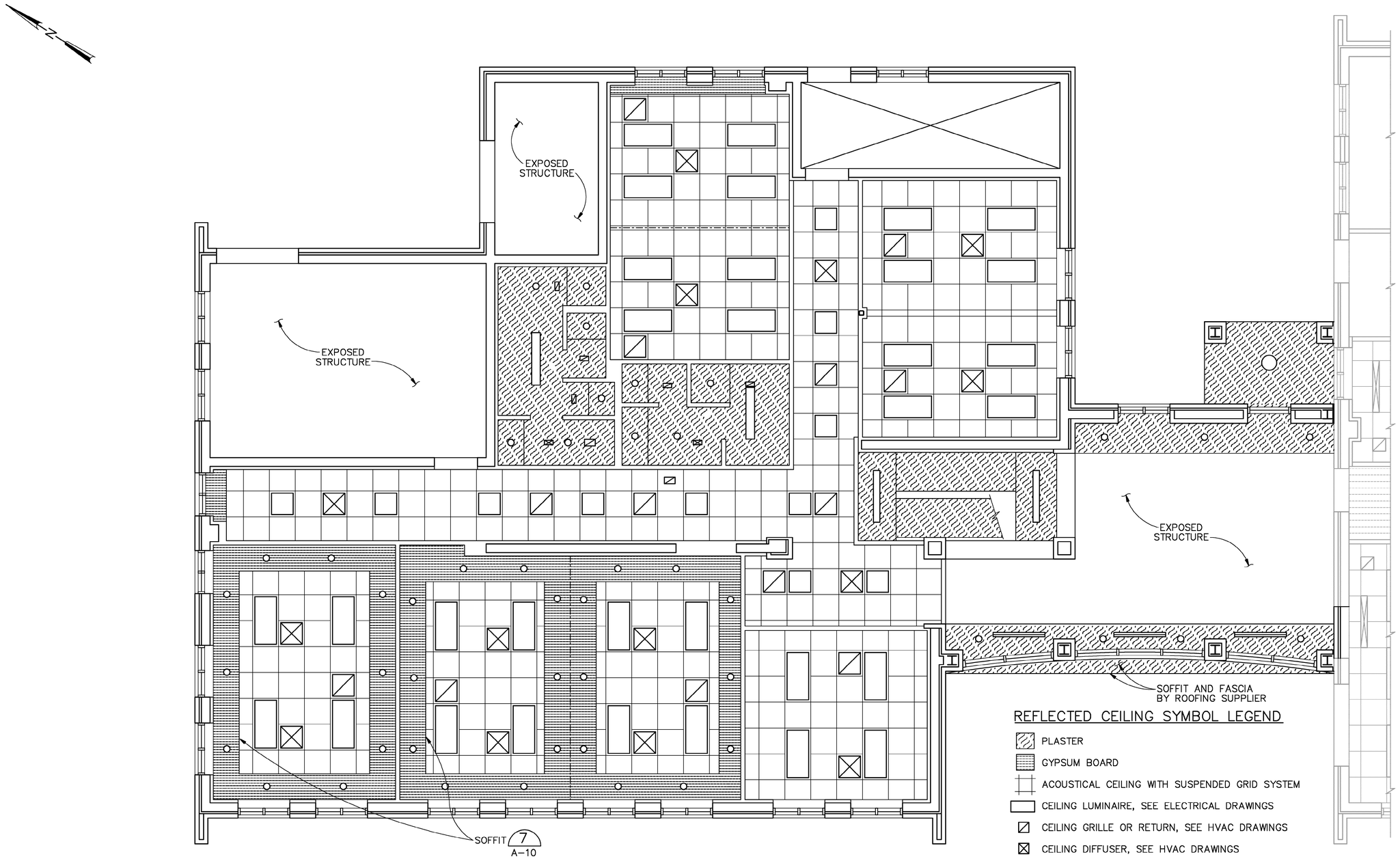

FIRST FLOOR REFLECTED CEILING PLAN

1/4"=1'-0"

REFLECTED CEILING SYMBOL LEGEND

- PLASTER
- GYPSUM BOARD
- ACOUSTICAL CEILING WITH SUSPENDED GRID SYSTEM
- CEILING LUMINAIRE, SEE ELECTRICAL DRAWINGS
- CEILING GRILLE OR RETURN, SEE HVAC DRAWINGS
- CEILING DIFFUSER, SEE HVAC DRAWINGS
- LINEAR DIFFUSER, SEE HVAC DRAWINGS
- RECESSED INCANDESCENT LUMINAIRE, SEE ELECTRICAL DRAWINGS

REUSE OF DOCUMENTS: THIS DOCUMENT, AND THE IDEAS AND DESIGNS INCORPORATED HEREIN, AS AN INSTRUMENT OF PROFESSIONAL SERVICE, IS THE PROPERTY OF CH2M HILL AND IS NOT TO BE USED, IN WHOLE OR IN PART, FOR ANY OTHER PROJECT WITHOUT THE WRITTEN AUTHORIZATION OF CH2MHILL.

©CH2M HILL

BID DOCUMENTS

DSGN R.G.SIEBERS					
DR R.G.SIEBERS					
CHK K.K.HARGREAVES					
APVD K.K.HARGREAVES	NO.	DATE	REVISION	BY	APVD

VERIFY SCALE
BAR IS ONE INCH ON ORIGINAL DRAWING.
0 1"
IF NOT ONE INCH ON THIS SHEET, ADJUST SCALES ACCORDINGLY.

CH2MHILL

126 ARW ILLINOIS AIR NATIONAL GUARD
SCOTT AIR FORCE BASE, IL
PROJECT NUMBER VDYF989075
KC-135 FLIGHT TRAINING UNIT

ARCHITECTURAL
FIRST FLOOR
REFLECTED CEILING PLAN

SHEET	12
DWG	A-3
DATE	MAY 2001
PROJ	160085.B1

FILENAME: 0085a03d.dlv PLOT DATE: 18-JUL-2001 PLOT TIME: 07:38:39

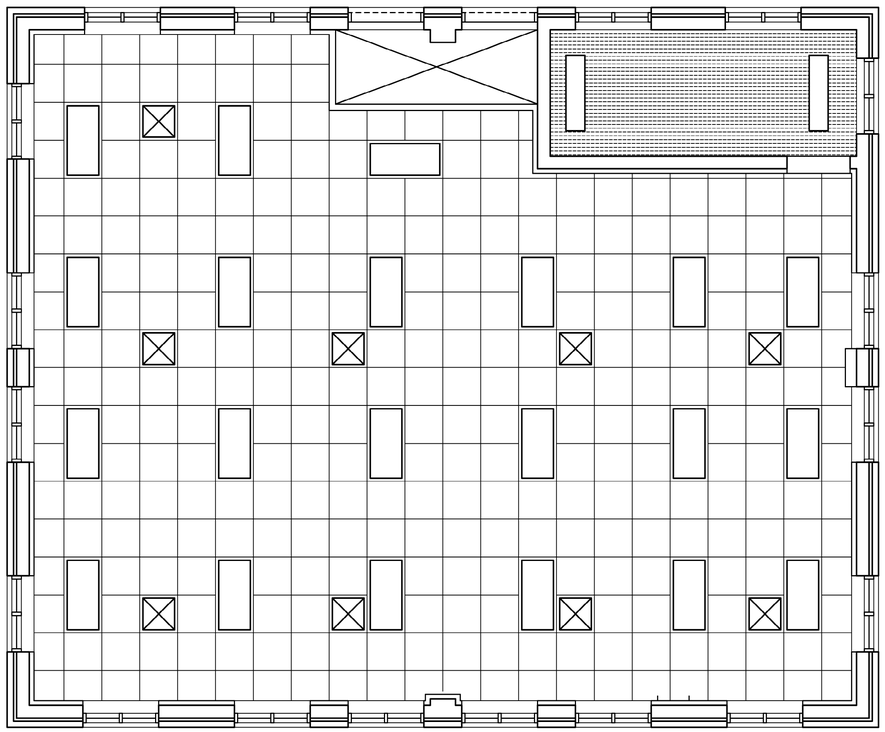

SECOND FLOOR REFLECTED CEILING PLAN
1/4"=1'-0"

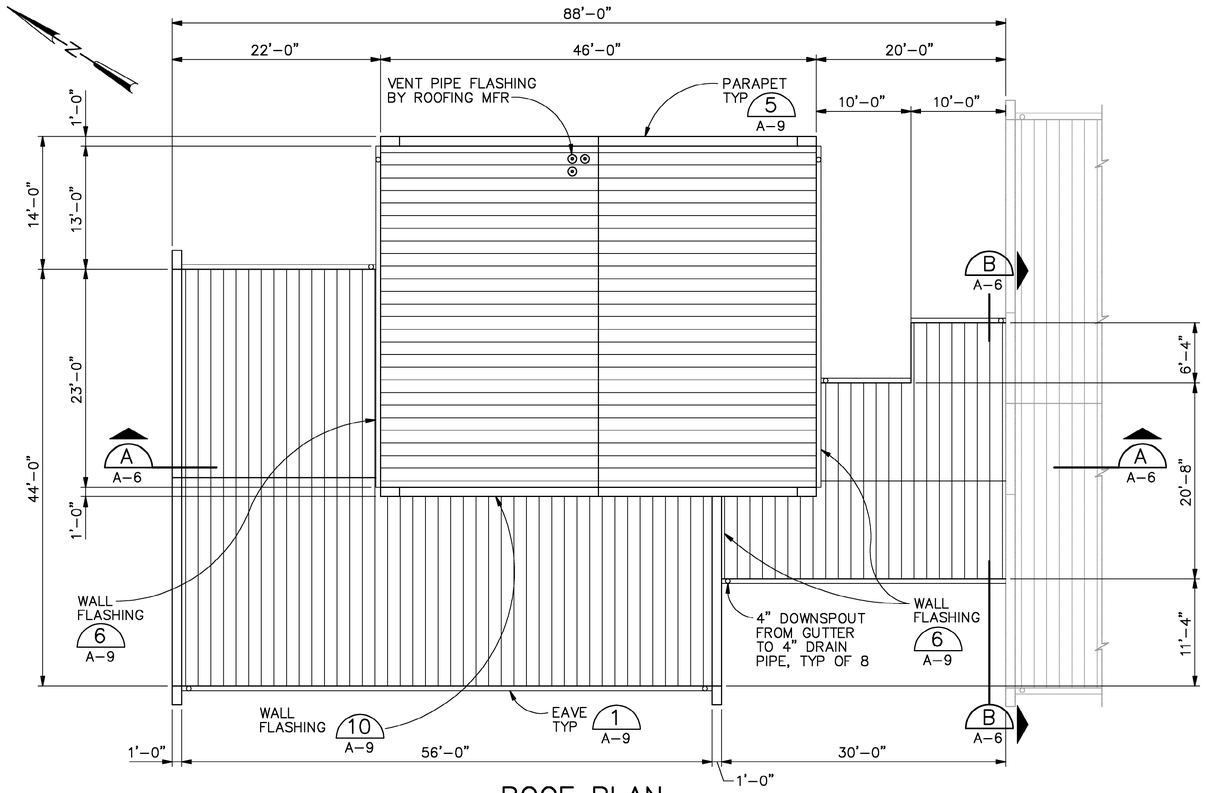

ROOF PLAN
1/8"=1'-0"

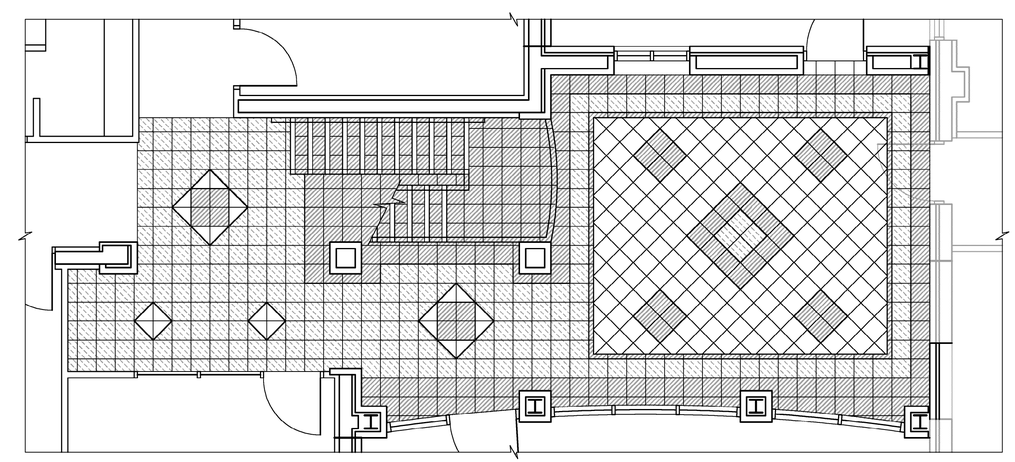

FIRST FLOOR TILE PLAN
1/4"=1'-0"

REFLECTED CEILING SYMBOL LEGEND

- PLASTER
- GYPSUM BOARD
- ACOUSTICAL CEILING WITH SUSPENDED GRID SYSTEM
- CEILING LUMINAIRE, SEE ELECTRICAL DRAWINGS
- CEILING GRILLE OR RETURN, SEE HVAC DRAWINGS
- CEILING DIFFUSER, SEE HVAC DRAWINGS
- RECESSED INCANDESCENT LUMINAIRE, SEE ELECTRICAL DRAWINGS

DSGN	R.G.SIEBERS
DR	R.G.SIEBERS
CHK	K.K.HARGREAVES
APVD	K.K.HARGREAVES

NO.	DATE	REVISION	BY	APVD

VERIFY SCALE
BAR IS ONE INCH ON ORIGINAL DRAWING.
0 1"
IF NOT ONE INCH ON THIS SHEET, ADJUST SCALES ACCORDINGLY.

CH2MHILL

126 ARW ILLINOIS AIR NATIONAL GUARD
SCOTT AIR FORCE BASE, IL
PROJECT NUMBER VDYF989075
KC-135 FLIGHT TRAINING UNIT

ARCHITECTURAL
SECOND FLOOR
REFLECTED CEILING, ROOF AND
FIRST FLOOR TILE PLANS

SHEET	13
DWG	A-4
DATE	MAY 2001
PROJ	160085.B1

FILENAME: 0085a04d.dlv PLOT DATE: 18-JUL-2001 PLOT TIME: 07:38:49

BID DOCUMENTS

REUSE OF DOCUMENTS: THIS DOCUMENT, AND THE IDEAS AND DESIGNS INCORPORATED HEREIN, AS AN INSTRUMENT OF PROFESSIONAL SERVICE, IS THE PROPERTY OF CH2M HILL AND IS NOT TO BE USED, IN WHOLE OR IN PART, FOR ANY OTHER PROJECT WITHOUT THE WRITTEN AUTHORIZATION OF CH2MHILL.
©CH2M HILL

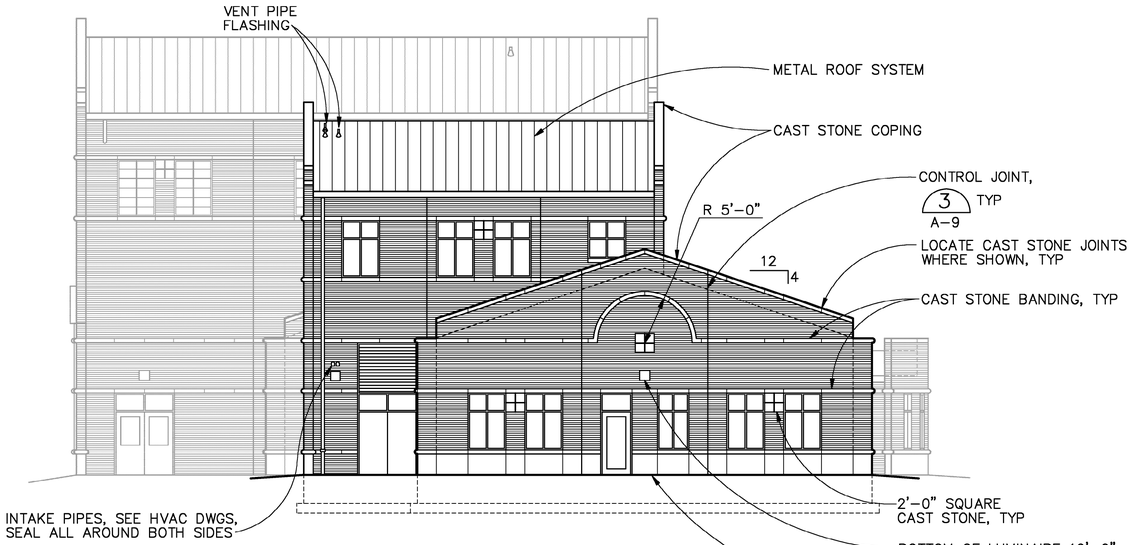

NORTHWEST ELEVATION
1/8"=1'-0"

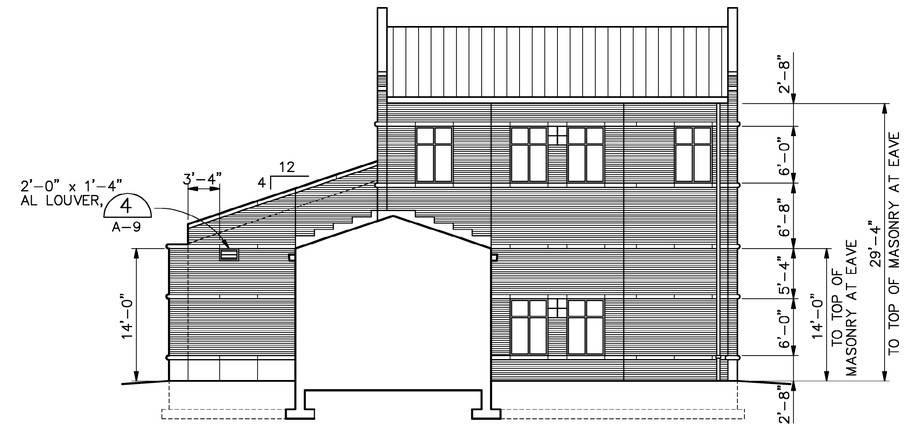

SOUTHEAST ELEVATION
1/8"=1'-0"

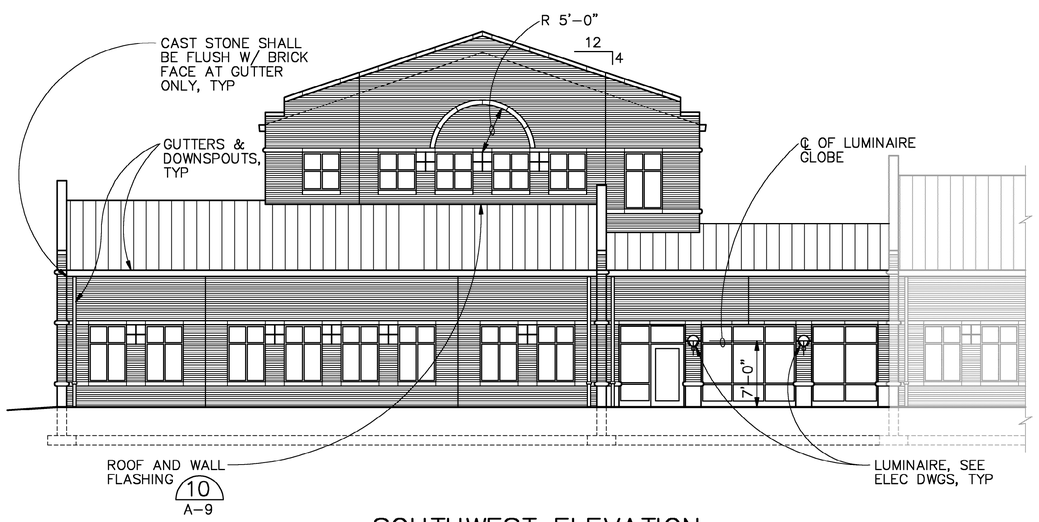

SOUTHWEST ELEVATION
1/8"=1'-0"

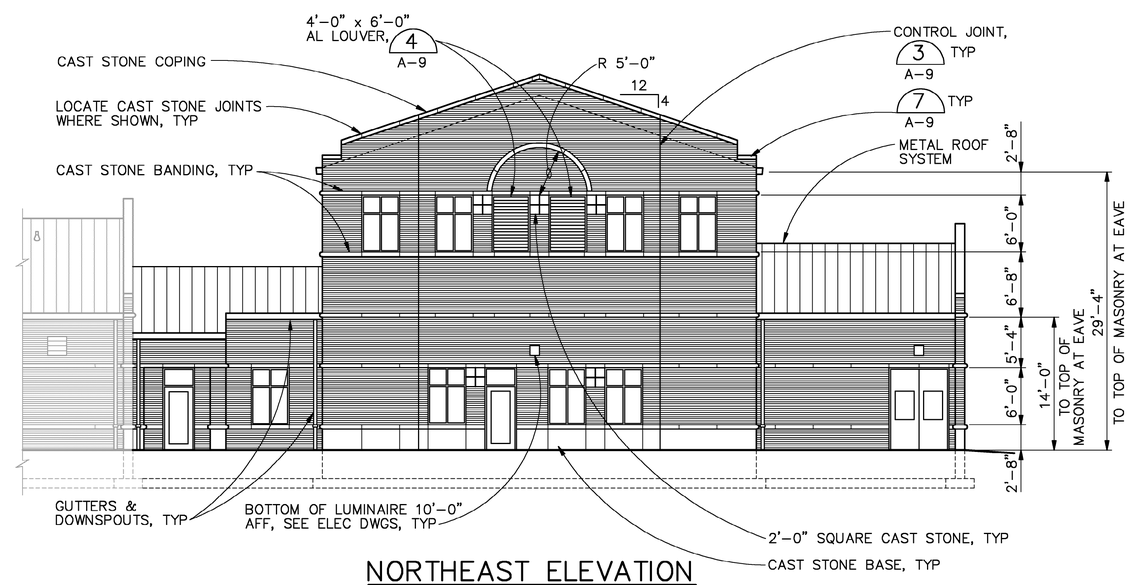

NORTHEAST ELEVATION
1/8"=1'-0"

©CH2M HILL
REUSE OF DOCUMENTS: THIS DOCUMENT, AND THE IDEAS AND DESIGNS INCORPORATED HEREIN, AS AN INSTRUMENT OF PROFESSIONAL SERVICE, IS THE PROPERTY OF CH2M HILL AND IS NOT TO BE USED, IN WHOLE OR IN PART, FOR ANY OTHER PROJECT WITHOUT THE WRITTEN AUTHORIZATION OF CH2MHILL.

BID DOCUMENTS

DSGN R.G.SIEBERS					
DR R.G.SIEBERS					
CHK K.K.HARGREAVES					
APVD K.K.HARGREAVES	NO.	DATE	REVISION	BY	APVD

VERIFY SCALE
BAR IS ONE INCH ON ORIGINAL DRAWING.
0 1"
IF NOT ONE INCH ON THIS SHEET, ADJUST SCALES ACCORDINGLY.

CH2MHILL

126 ARW ILLINOIS AIR NATIONAL GUARD
SCOTT AIR FORCE BASE, IL
PROJECT NUMBER VDYF989075
KC-135 FLIGHT TRAINING UNIT

ARCHITECTURAL

ELEVATIONS

SHEET	14
DWG	A-5
DATE	MAY 2001
PROJ	160085.B1

FILENAME: 0085a05d.dlv PLOT DATE: 18-JUL-2001 PLOT TIME: 07:38:58

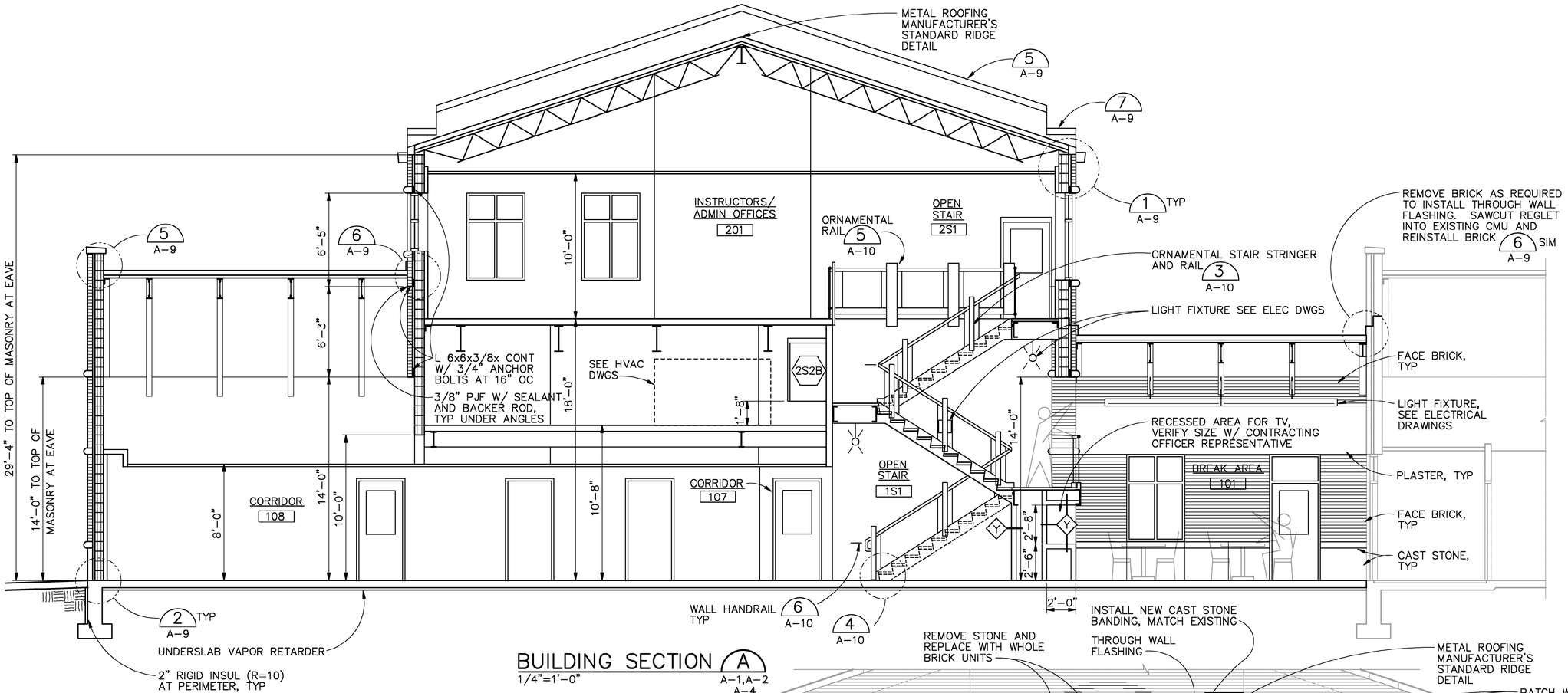

BUILDING SECTION A
1/4"=1'-0"
A-1,A-2
A-4

BUILDING SECTION B
1/4"=1'-0"
A-1, A-4

DSGN R.G.SIEBERS					
DR R.G.SIEBERS					
CHK K.K.HARGREAVES					
APVD K.K.HARGREAVES	NO.	DATE	REVISION	BY	APVD

VERIFY SCALE
BAR IS ONE INCH ON ORIGINAL DRAWING.
0 1"
IF NOT ONE INCH ON THIS SHEET, ADJUST SCALES ACCORDINGLY.

CH2MHILL

126 ARW ILLINOIS AIR NATIONAL GUARD
SCOTT AIR FORCE BASE, IL
PROJECT NUMBER VDYF989075
KC-135 FLIGHT TRAINING UNIT

ARCHITECTURAL

BUILDING SECTIONS

SHEET	15
DWG	A-6
DATE	MAY 2001
PROJ	160085.B1

FILENAME: 0085a06d.dlv PLOT DATE: 18-JUL-2001 PLOT TIME: 07:39:04

BID DOCUMENTS

REUSE OF DOCUMENTS: THIS DOCUMENT, AND THE IDEAS AND DESIGNS INCORPORATED HEREIN, AS AN INSTRUMENT OF PROFESSIONAL SERVICE, IS THE PROPERTY OF CH2M HILL AND IS NOT TO BE USED, IN WHOLE OR IN PART, FOR ANY OTHER PROJECT WITHOUT THE WRITTEN AUTHORIZATION OF CH2MHILL.
©CH2M HILL

INTERIOR FINISH SCHEDULE

NOTE: SEE DRAWING A–4 FOR TILE LAYOUT FOR ROOMS 101 AND 102.

ROOM		FLOOR		CURB/BASE		TYP WALL		OTHER WALL		CEILING			MISCELLANEOUS		
NUMBER	NAME	SUBFL	FINISH	MATL/ HEIGHT	FINISH	MATL	FINISH	MATL	FINISH	HEIGHT	MATL	FINISH	ITEM	MATL	FINISH
101	BREAK AREA	CONC	UPST	4"	UPST	BRICK	FCTY	–	–	14'+	EXPOSED STRUCT	107	8'–8"HIGH SOFFIT	PLASTER	115
102	WAITING AREA	CONC	UPST	4"	UPST	GWB	115	BRICK/ STONE	FCTY	9'–0"	SAT	FCTY			
103	BRIEFING 1	CONC	CARPET	4"	RBR	GWB	115	–	–	8'–0"	SAT	FCTY			
104	BRIEFING 3	CONC	CARPET	4"	RBR	GWB	115	–	–	9'–0"	SAT	FCTY			
105	MISSION PLANNING	CONC	CARPET	4"	RBR	GWB	115	–	–	8'–0"	SAT	FCTY			
106	BRIEFING 2	CONC	CARPET	4"	RBR	GWB	115	–	–	9'–0"	SAT	FCTY			
107	CORRIDOR	CONC	VCT	4"	RBR	GWB	115	–	–	8'–0"	SAT	FCTY			
108	CORRIDOR	CONC	VCT	4"	RBR	GWB	115	–	–	8'–0"	SAT	FCTY			
109	WOMEN	CONC	CT	4'–6"	CT	GWB	115	–	–	8'–0"/ 7'–0"	PLASTER	115			
110	ORDERLY ROOM	CONC	CARPET	4"	RBR	GWB	115	–	–	9'–0"	SAT	FCTY			
111	MEN	CONC	CT	4'–6"	CT	GWB	115	–	–	8'–0"/ 7'–0"	PLASTER	115			
112	CLASSROOM 3	CONC	CARPET	4"	RBR	GWB	115	–	–	9'–0"/ 10'–0"	GWB/ SAT	115/ FCTY			
113	BOOM OPERATOR/ PART TASK TRAINER	CONC	VCT	4"	RBR	CMU	109	–	–	14'+	EXPOSED STRUCT	107			
114	CLASSROOM 2	CONC	CARPET	4"	RBR	GWB	115	–	–	9'–0"/ 10'–0"	GWB/ SAT	115/ FCTY			
115	MECHANICAL/HVAC	CONC	SEALER	–	–	CMU	109	–	–	14'+	EXPOSED STRUCT	107			
116	CLASSROOM 1	CONC	CARPET	4"	RBR	GWB	115	–	–	9'–0"/ 10'–0"	GWB/ SAT	115/ FCTY			
1S1	OPEN STAIR	CONC	UPST	4"	UPST	GWB	115	BRICK/ STONE	FCTY	VARIES	PLASTER	115			
1S2	ENCLOSED STAIR	CONC	RBR	4"	RBR	CMU	109	–	–	VARIES	EXPOSED STRUCT	107			
2S1	OPEN STAIR	CONC	UPST	4"	UPST	GWB	115	–	–	10'–0"	SAT	FCTY			
2S2	ENCLOSED STAIR	CONC	RBR	4"	RBR	CMU	109	–	–	9'–0"	GWB	115			
201	INSTRUCTORS/ADMIN. OFFICE	CONC	CARPET	4"	RBR	GWB	115	–	–	10'–0"	SAT	FCTY			
202	HVAC EQUIPMENT MEZZANINE	CONC	SEALER	–	–	CMU	109	GWB	115	7'+/–	EXPOSED STRUCT	107	BASE FOR GWB WALL	4"	RBR

DOOR SCHEDULE

DOOR NUMBER	DOOR SIZE		DOOR				FRAME			LABEL	DETAILS (SEE DWG A–8)			HDW SET	NAMEPLATE TEXT (EACH ROW OF TEXT IS A SEPARATE SIGN)
	WIDTH	HEIGHT	MATL	TYPE	FINISH	GLASS	MATL	TYPE	FINISH		HEAD	JAMB	SILL		
101A	3'–6"	7'–0"	AL	FG	FCTY	ITG	AL	F–4	FCTY	–	1 SIM	2 SIM	3	HDW–1	
101B	3'–0"	7'–0"	AL	FG	FCTY	ITG	AL	F–2	FCTY	–	1	2	3	HDW–2	
103A	3'–0"	7'–0"	WD	F	105	–	HM	F–1	107	–	9	10	4	HDW–4	BRIEFING 1
104D	3'–0"	7'–0"	WD	F	105	–	HM	F–1	107	–	9	10	4	HDW–4	BRIEFING 3
105A	3'–0"	7'–0"	WD	F	105	–	HM	F–1	107	–	9	10	4	HDW–4	MISSION PLANNING
106A	3'–0"	7'–0"	WD	F	105	–	HM	F–1	107	–	9	10	4	HDW–4	BRIEFING 2
108A	3'–0"	7'–0"	AL	FG	FCTY	ITG	AL	F–2	FCTY	–	1	2	3	HDW–2	
109A	3'–0"	7'–0"	WD	F	105	–	HM	F–1	107	–	9	10	4	HDW–5	WOMEN
110A	3'–0"	7'–0"	WD	F	105	–	HM	F–6	107	–	9	10	4	HDW–4	ORDERLY
111A	3'–0"	7'–0"	WD	F	105	–	HM	F–1	107	–	9	10	4	HDW–5	MEN
112A	3'–0"	7'–0"	WD	F	105	–	HM	F–3	107	–	7	8	4	HDW–6	CLASSROOM 3
113A	(2)3'–0"	8'–6"	HM	HG	107	ITG	HM	F–1	107	–	5	6	3	HDW–3	BOOM OPERATOR
113B	3'–0"	7'–0"	WD	HG	105	TG	HM	F–1	107	–	7	8	4	HDW–4	BOOM OPERATOR
114A	3'–0"	7'–0"	WD	F	105	–	HM	F–3	107	–	9	10 SIM	4	HDW–8	CLASSROOM 2
115A	(2)3'–0"	7'–0"	HM	F	107	–	HM	F–5	107	–	15	6	3	HDW–9	MECHANICAL
116A	3'–0"	7'–0"	WD	F	105	–	HM	F–3	107	–	9	10	4	HDW–8	CLASSROOM 1
1S2A	3'–0"	7'–0"	AL	FG	FCTY	ITG	AL	F–2	FCTY	–	1	2	3	HDW–2	
1S2B	3'–0"	7'–0"	WD	HG	105	WG	HM	F–1	107	3/4 HR	7	8	4	HDW–7	STAIR
2S2A	3'–0"	7'–0"	WD	HG	105	WG	HM	F–1	107	3/4 HR	7	8	4	HDW–7	STAIR
2S2B	4'–0"	4'–0"	HM	F	107	–	HM	F–1	107	3/4 HR	7	8	4	HDW–7	

WINDOW SCHEDULE

NUMBER	SIZE		WINDOW		FRAME		DETAILS (SEE DWG A–B)			REMARKS
	WIDTH	HEIGHT	TYPE	CLASS	MATL	FINISH	HEAD	JAMB	SILL	
W–1	3'–4"	6'–0"	W–1	IG	AL	FCTY	11	12 SIM	13	
W–2	4'–0"	4'–0"	W–2	IG	AL	FCTY	11	12	13	
W–3	4'–0"	6'–0"	W–3	IG	AL	FCTY	11	12	13	
W–4	7'–8"±	8'–8"	W–4	IG	AL	FCTY	11	12	14	100'–0" OUTSIDE RADIUS (SEE PLAN)
W–5	10'–8"±	8'–8"	W–5	IG	AL	FCTY	11	12	14	100'–0" OUTSIDE RADIUS (SEE PLAN)

WINDOW TYPES

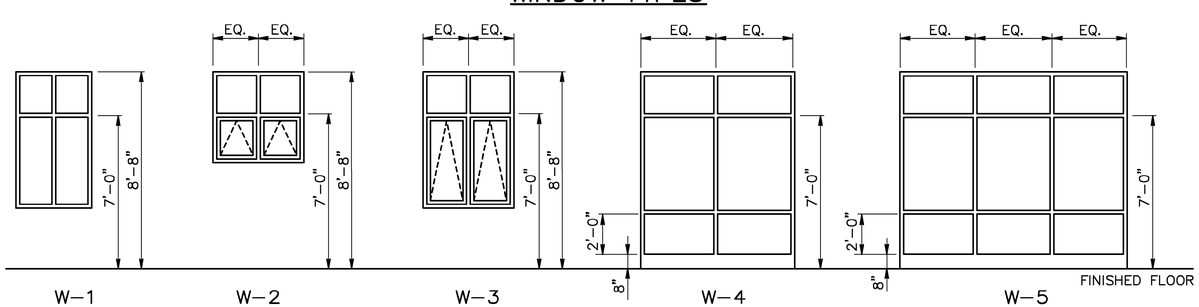

FRAME TYPES

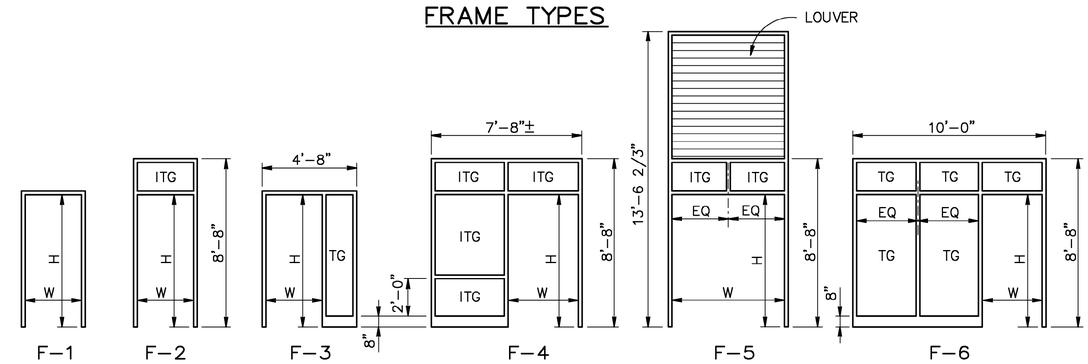

DOOR TYPES

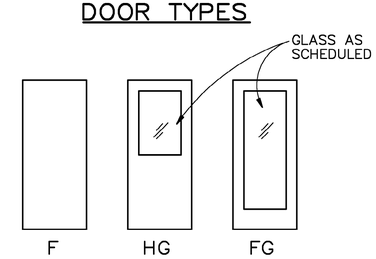

DSGN R.G.SIEBERS					
DR R.G.SIEBERS					
CHK K.K.HARGREAVES					
APVD K.K.HARGREAVES	NO.	DATE	REVISION	BY	APVD

VERIFY SCALE
BAR IS ONE INCH ON ORIGINAL DRAWING.
0 1"
IF NOT ONE INCH ON THIS SHEET, ADJUST SCALES ACCORDINGLY.

CH2MHILL

126 ARW ILLINOIS AIR NATIONAL GUARD
SCOTT AIR FORCE BASE, IL
PROJECT NUMBER VDYF989075
KC–135 FLIGHT TRAINING UNIT

ARCHITECTURAL

SCHEDULES

SHEET	16
DWG	A–7
DATE	MAY 2001
PROJ	160085.B1

FILENAME: 0085a07d.dlv PLOT DATE: 18–JUL–2001 PLOT TIME: 07:39:11

BID DOCUMENTS

REUSE OF DOCUMENTS: THIS DOCUMENT, AND THE IDEAS AND DESIGNS INCORPORATED HEREIN, AS AN INSTRUMENT OF PROFESSIONAL SERVICE, IS THE PROPERTY OF CH2M HILL AND IS NOT TO BE USED, IN WHOLE OR IN PART, FOR ANY OTHER PROJECT WITHOUT THE WRITTEN AUTHORIZATION OF CH2MHILL.
©CH2M HILL

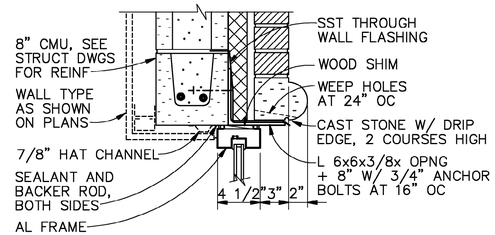

DOOR HEAD DETAIL (1)
1 1/2" = 1'-0" A-7

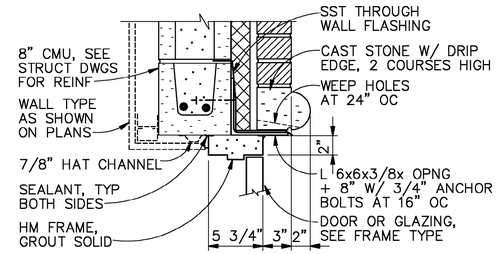

DOOR HEAD DETAIL (5)
1 1/2" = 1'-0" A-7, A-8

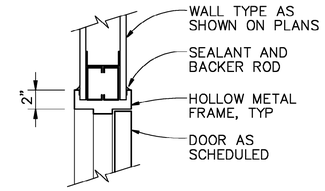

DOOR HEAD DETAIL (9)
1 1/2" = 1'-0" A-7

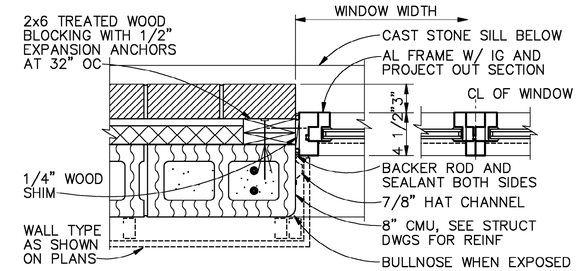

WINDOW JAMB DETAIL (13)
1 1/2" = 1'-0" A-7

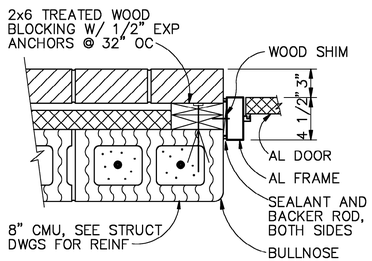

DOOR JAMB DETAIL (2)
1 1/2" = 1'-0" A-7

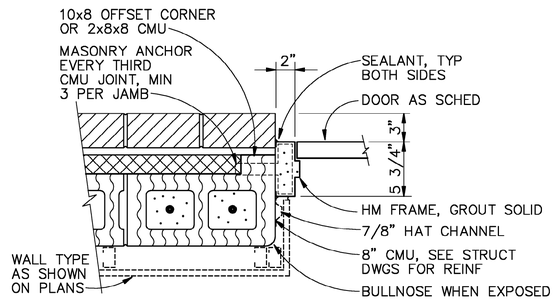

DOOR JAMB DETAIL (6)
1 1/2" = 1'-0" A-7

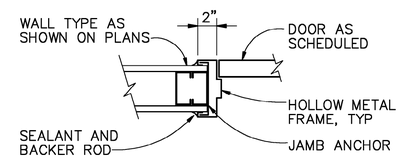

DOOR JAMB DETAIL (10)
1 1/2" = 1'-0" A-7

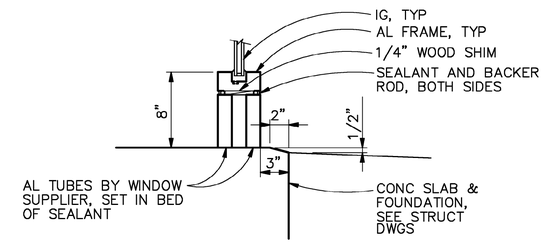

WINDOW SILL DETAIL (14)
1 1/2" = 1'-0" A-7

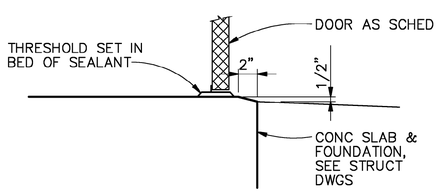

DOOR SILL DETAIL (3)
1 1/2" = 1'-0" A-7

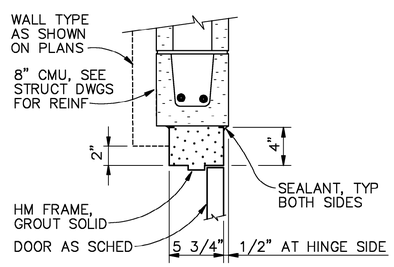

DOOR HEAD DETAIL (7)
1 1/2" = 1'-0" A-7

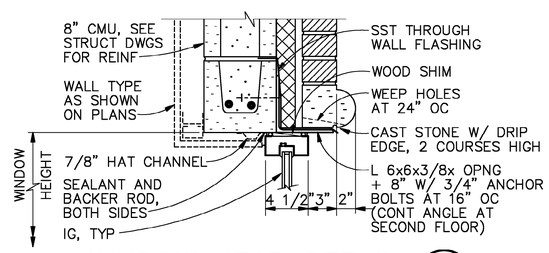

WINDOW HEAD DETAIL (11)
1 1/2" = 1'-0" A-7

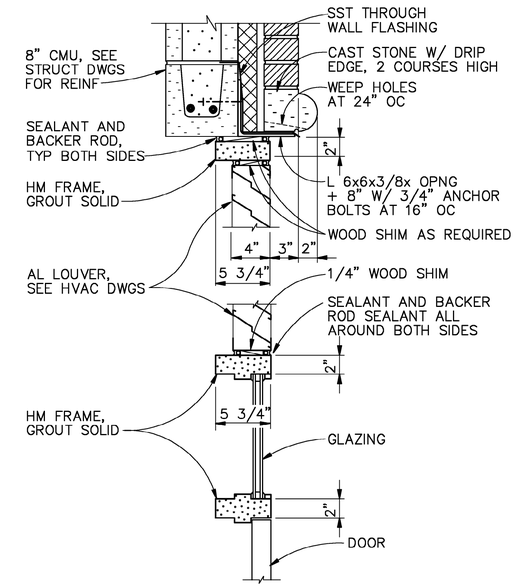

DOOR HEAD DETAIL (15)
1 1/2" = 1'-0" A-7

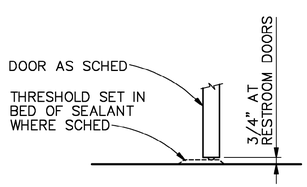

DOOR SILL DETAIL (4)
1 1/2" = 1'-0" A-7

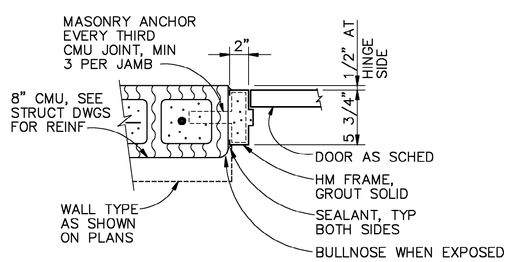

DOOR JAMB DETAIL (8)
1 1/2" = 1'-0" A-7

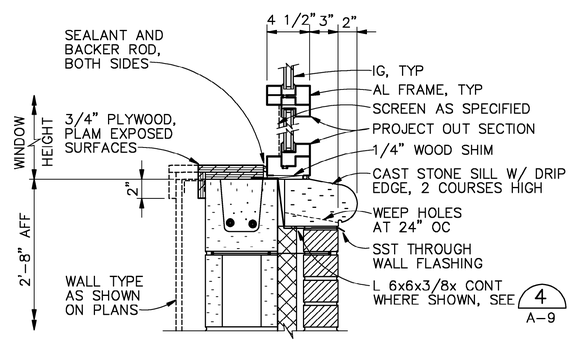

WINDOW SILL DETAIL (12)
1 1/2" = 1'-0" A-7

DSGN R.G.SIEBERS						VERIFY SCALE
DR R.G.SIEBERS						BAR IS ONE INCH ON ORIGINAL DRAWING. 0 1"
CHK K.K.HARGREAVES						IF NOT ONE INCH ON THIS SHEET, ADJUST SCALES ACCORDINGLY.
APVD K.K.HARGREAVES	NO.	DATE	REVISION	BY	APVD	

CH2MHILL

126 ARW ILLINOIS AIR NATIONAL GUARD
SCOTT AIR FORCE BASE, IL
PROJECT NUMBER VDYF989075
KC-135 FLIGHT TRAINING UNIT

ARCHITECTURAL

DETAILS

SHEET	17
DWG	A-8
DATE	MAY 2001
PROJ	160085.B1

FILENAME: 0085a08d.dlv PLOT DATE: 18-JUL-2001 PLOT TIME: 07:39:16

BID DOCUMENTS

REUSE OF DOCUMENTS: THIS DOCUMENT, AND THE IDEAS AND DESIGNS INCORPORATED HEREIN, AS AN INSTRUMENT OF PROFESSIONAL SERVICE, IS THE PROPERTY OF CH2M HILL AND IS NOT TO BE USED, IN WHOLE OR IN PART, FOR ANY OTHER PROJECT WITHOUT THE WRITTEN AUTHORIZATION OF CH2MHILL.
©CH2M HILL

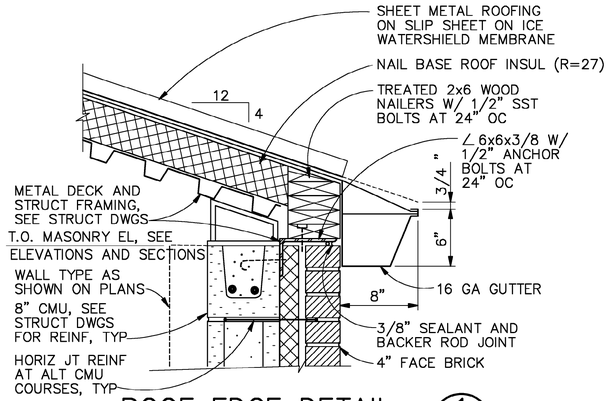

ROOF EDGE DETAIL (1)

1 1/2" = 1'-0" A-2, A-4

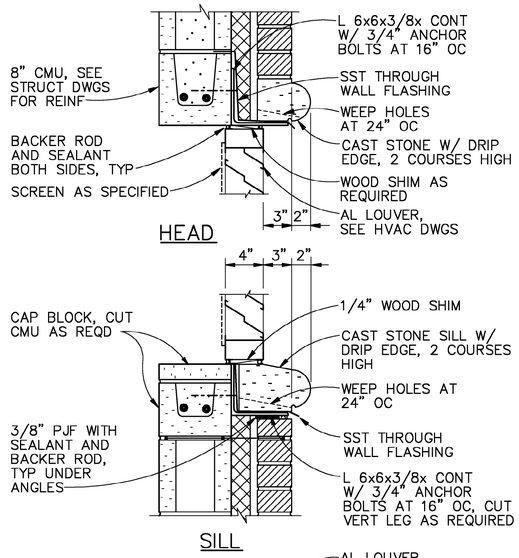

LOUVER DETAIL (4)

1 1/2" = 1'-0" A-2, A-5, A-8

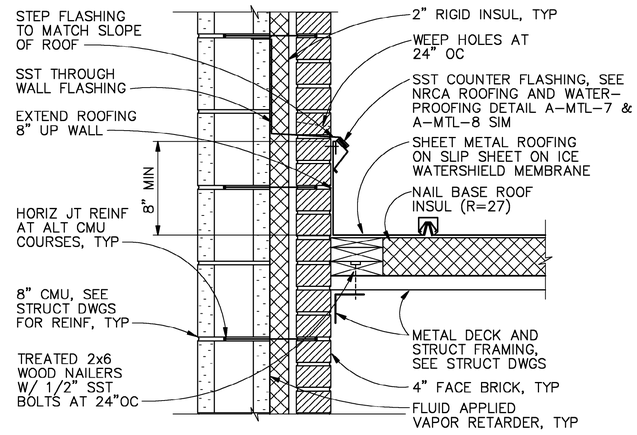

ROOF DETAIL (6)

1 1/2" = 1'-0" A-4, A-6

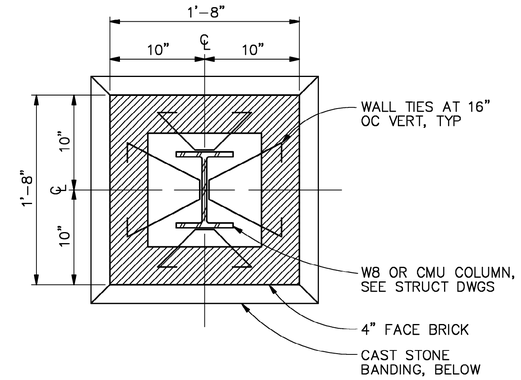

COLUMN DETAIL (9)

1 1/2" = 1'-0" A-1

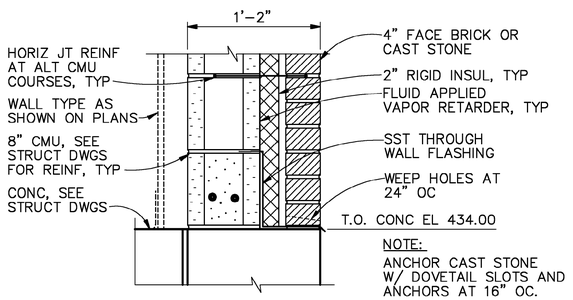

WALL BASE DETAIL (2)

1 1/2" = 1'-0" A-2, A-6

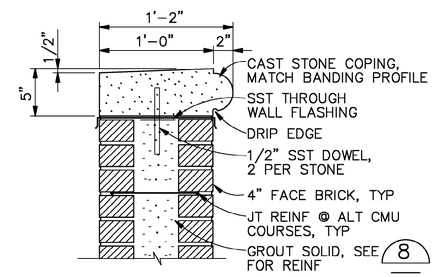

PARAPET DETAIL (7)

1 1/2" = 1'-0" A-5, A-6

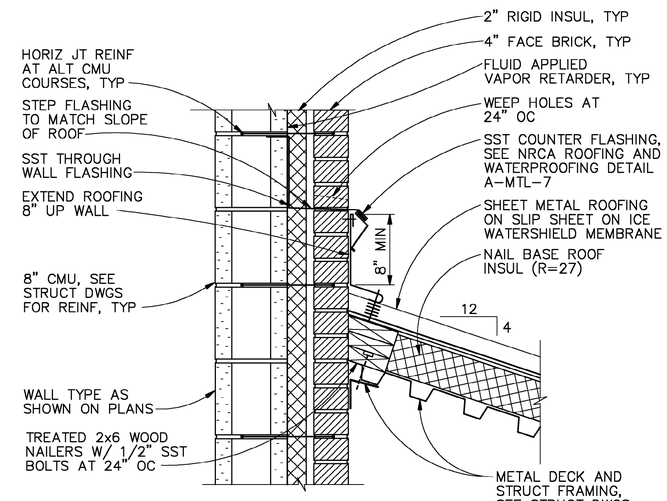

ROOF DETAIL (10)

1 1/2" = 1'-0" A-4, A-5

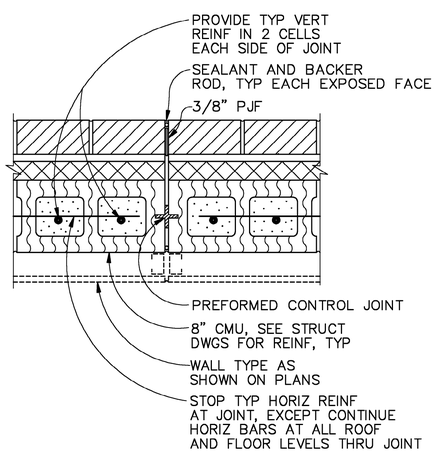

CONTROL JOINT DETAIL (3)

1 1/2" = 1'-0" A-1, A-2

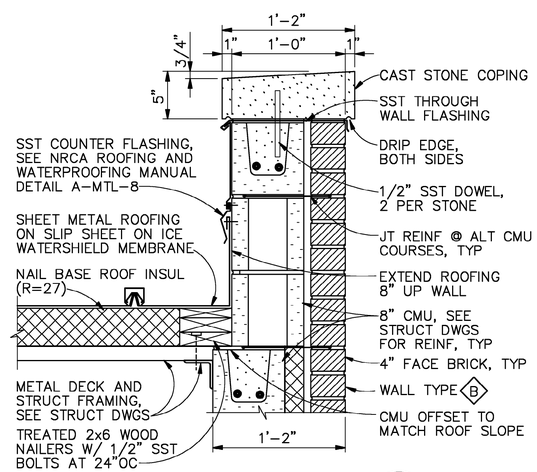

PARAPET DETAIL (5)

1 1/2" = 1'-0" A-2, A-4, A-6

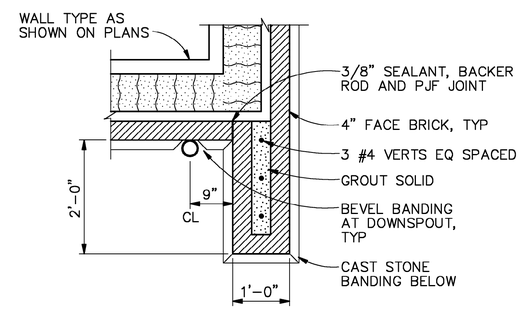

CORNER DETAIL (8)

3/4" = 1'-0" A-1, A-9

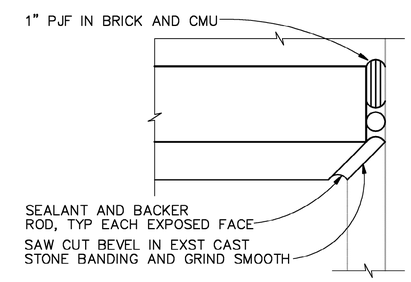

EXPANSION JOINT DETAIL (11)

3" = 1'-0" A-1

DSGN R.G.SIEBERS						VERIFY SCALE
DR R.G.SIEBERS						BAR IS ONE INCH ON ORIGINAL DRAWING. 0 1"
CHK K.K.HARGREAVES						IF NOT ONE INCH ON THIS SHEET, ADJUST SCALES ACCORDINGLY.
APVD K.K.HARGREAVES	NO.	DATE	REVISION	BY	APVD	

CH2MHILL

126 ARW ILLINOIS AIR NATIONAL GUARD
SCOTT AIR FORCE BASE, IL
PROJECT NUMBER VDYF989075
KC-135 FLIGHT TRAINING UNIT

ARCHITECTURAL

DETAILS

SHEET 18
DWG A-9
DATE MAY 2001
PROJ 160085.B1

BID DOCUMENTS

REUSE OF DOCUMENTS: THIS DOCUMENT, AND THE IDEAS AND DESIGNS INCORPORATED HEREIN, AS AN INSTRUMENT OF PROFESSIONAL SERVICE, IS THE PROPERTY OF CH2M HILL AND IS NOT TO BE USED, IN WHOLE OR IN PART, FOR ANY OTHER PROJECT WITHOUT THE WRITTEN AUTHORIZATION OF CH2MHILL.
©CH2M HILL

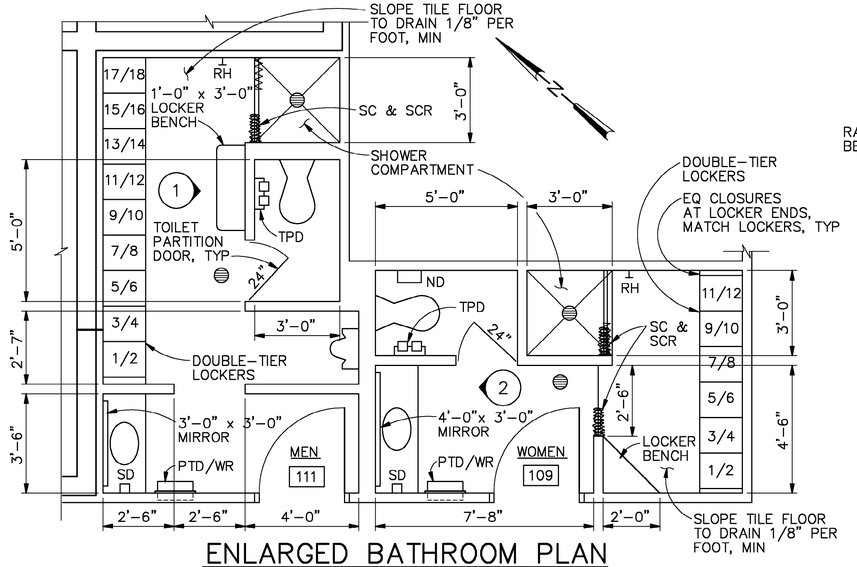

ENLARGED BATHROOM PLAN

3/8"=1'-0"

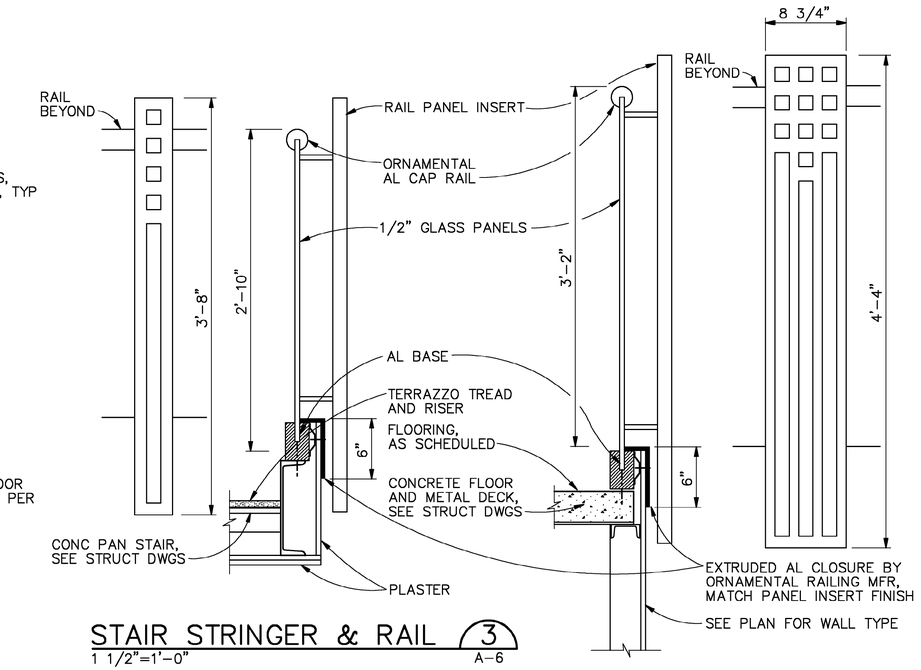

STAIR STRINGER & RAIL 3

1 1/2"=1'-0" A-6

LANDING RAIL 5

1 1/2"=1'-0" A-6

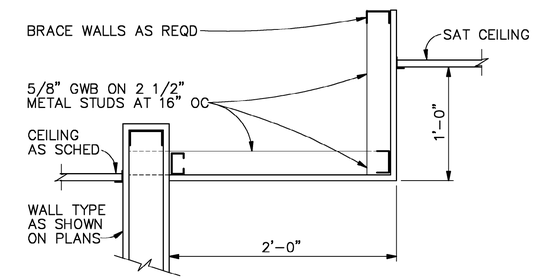

CEILING DETAIL 7

1 1/2" = 1'-0" A-3

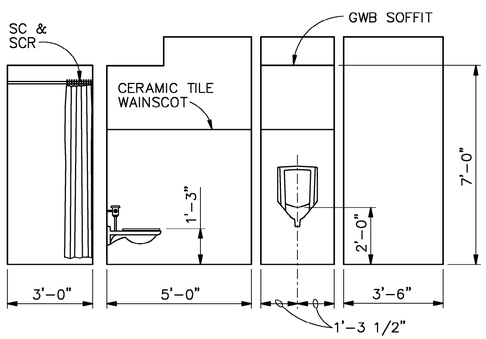

ELEVATION 1

3/8"=1'-0"

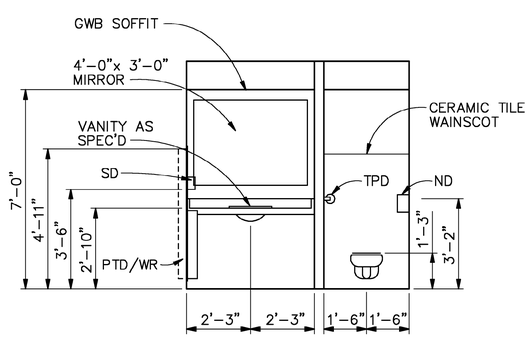

ELEVATION 2

3/8"=1'-0"

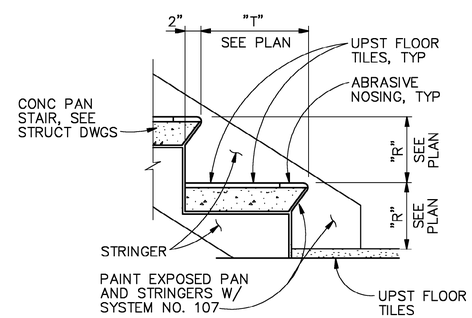

TREAD AND RISER 4

1 1/2"=1'-0" A-6

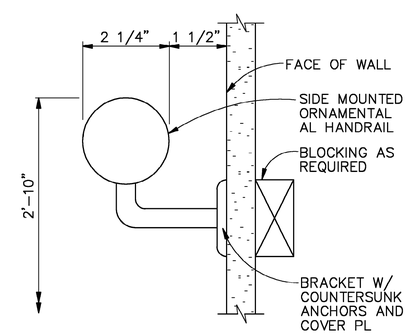

HANDRAIL DETAIL 6

6"=1'-0" A-6

DSGN R.G.SIEBERS						VERIFY SCALE
DR R.G.SIEBERS						BAR IS ONE INCH ON ORIGINAL DRAWING. 0 1" IF NOT ONE INCH ON THIS SHEET, ADJUST SCALES ACCORDINGLY.
CHK K.K.HARGREAVES						
APVD K.K.HARGREAVES	NO.	DATE	REVISION	BY	APVD	

CH2MHILL

126 ARW ILLINOIS AIR NATIONAL GUARD
SCOTT AIR FORCE BASE, IL
PROJECT NUMBER VDYF989075
KC-135 FLIGHT TRAINING UNIT

ARCHITECTURAL

ENLARGED BATHROOM PLAN, ELEVATIONS AND DETAILS

SHEET	19
DWG	A-10
DATE	MAY 2001
PROJ	160085.B1

FILENAME: 0085a10d.dlv PLOT DATE: 18-JUL-2001 PLOT TIME: 07:39:28

BID DOCUMENTS

REUSE OF DOCUMENTS: THIS DOCUMENT, AND THE IDEAS AND DESIGNS INCORPORATED HEREIN, AS AN INSTRUMENT OF PROFESSIONAL SERVICE, IS THE PROPERTY OF CH2M HILL AND IS NOT TO BE USED, IN WHOLE OR IN PART, FOR ANY OTHER PROJECT WITHOUT THE WRITTEN AUTHORIZATION OF CH2MHILL.
©CH2M HILL

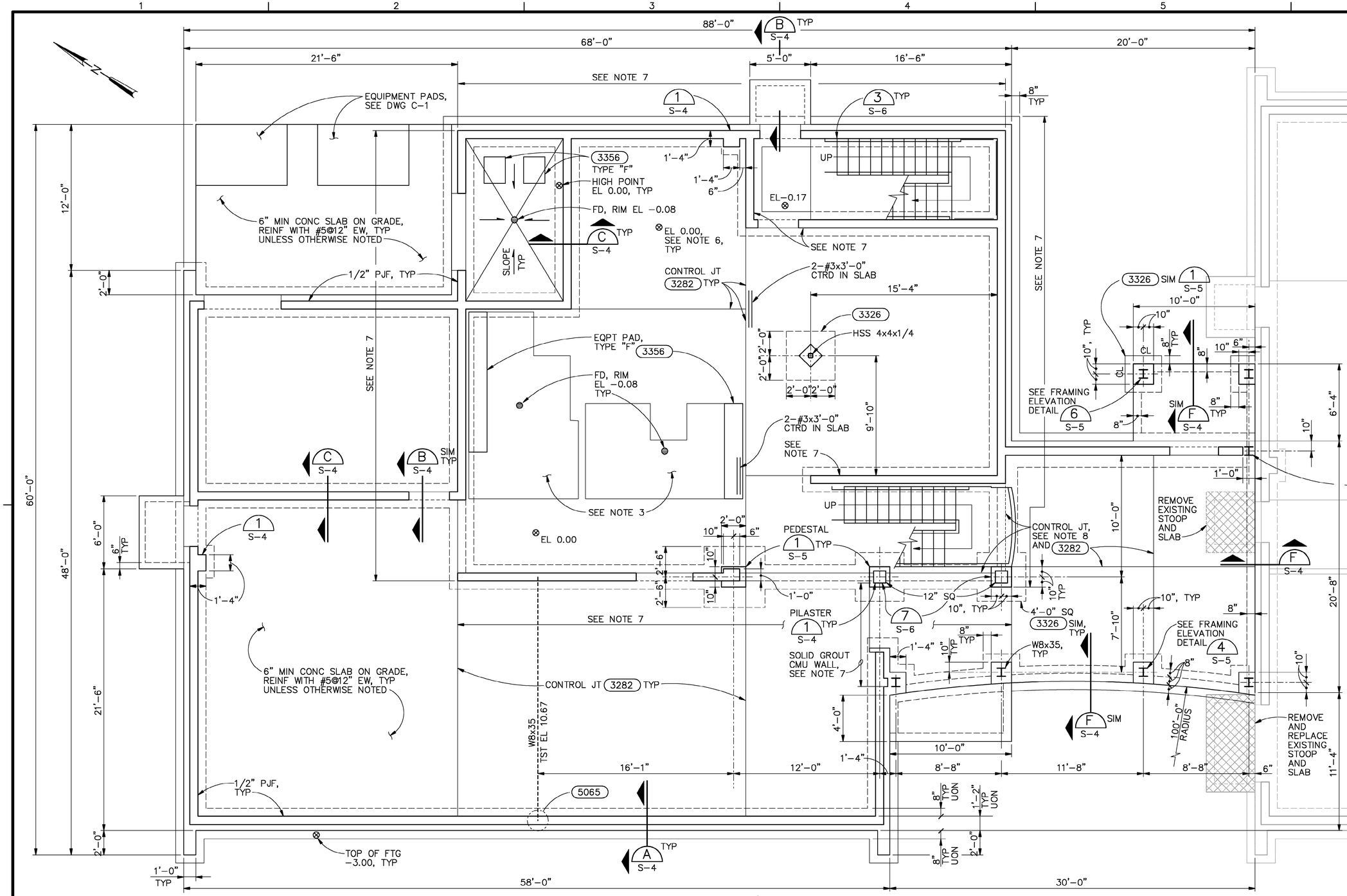

FOUNDATION/FLOOR PLAN

1/4"=1'-0"

NOTES:

1. REFER TO GENERAL STRUCTURAL NOTES ON DRAWING G-4. THESE NOTES APPLY TO ALL STRUCTURAL DRAWINGS.
2. REFER TO ARCHITECTURAL, ELECTRICAL AND BUILDING SERVICES DRAWINGS FOR EQUIPMENT, PIPING, DRAINS, DUCT OPENINGS AND ELECTRICAL ITEMS EMBEDDED IN SLAB.
3. DEPRESS SLAB 2" FOR TILE. COORDINATE WITH ARCHITECTURAL DRAWINGS.
4. FOR SIZE OF CMU WALLS, LOCATIONS OF OPENINGS AND CONTROL JOINTS IN CMU WALLS, SEE ARCHITECTURAL DRAWINGS.
5. PROVIDE CONSTRUCTION JOINTS AS REQUIRED PER SPECIFICATIONS OR AT CONTROL JOINT LOCATIONS SHOWN. FOR CONSTRUCTION JOINT DETAIL, SEE 3281.
6. FIRST FLOOR CONCRETE SLAB HIGH POINT ELEVATION 0.00 SHALL MATCH EXISTING FLIGHT SIMULATOR TRAINING FACILITY FIRST FLOOR CONCRETE SLAB HIGH POINT ELEVATION.
7. SOLID GROUT CMU WALL FULL HEIGHT.
8. COORDINATE CONCRETE CONTROL JOINT LOCATIONS WITH TILE CONTROL JOINT LOCATIONS.

DSGN D.R.LANGE						VERIFY SCALE	CH2MHILL
DR M.A.REICHERT						BAR IS ONE INCH ON ORIGINAL DRAWING. 0 1" IF NOT ONE INCH ON THIS SHEET, ADJUST SCALES ACCORDINGLY.	
CHK R.A.GERMAINE							
APVD K.K.HARGREAVES	NO.	DATE	REVISION	BY	APVD		

126 ARW ILLINOIS AIR NATIONAL GUARD
SCOTT AIR FORCE BASE, IL
PROJECT NUMBER VDYF989075
KC-135 FLIGHT TRAINING UNIT

STRUCTURAL

FOUNDATION/FLOOR PLAN

SHEET	20
DWG	S-1
DATE	MAY 2001
PROJ	160085.B1

FILENAME: 0085s01d.dlv PLOT DATE:18-JUL-2001 PLOT TIME:07:43:49

BID DOCUMENTS

REUSE OF DOCUMENTS: THIS DOCUMENT, AND THE IDEAS AND DESIGNS INCORPORATED HEREIN, AS AN INSTRUMENT OF PROFESSIONAL SERVICE, IS THE PROPERTY OF CH2M HILL AND IS NOT TO BE USED, IN WHOLE OR IN PART, FOR ANY OTHER PROJECT WITHOUT THE WRITTEN AUTHORIZATION OF CH2MHILL.

©CH2M HILL

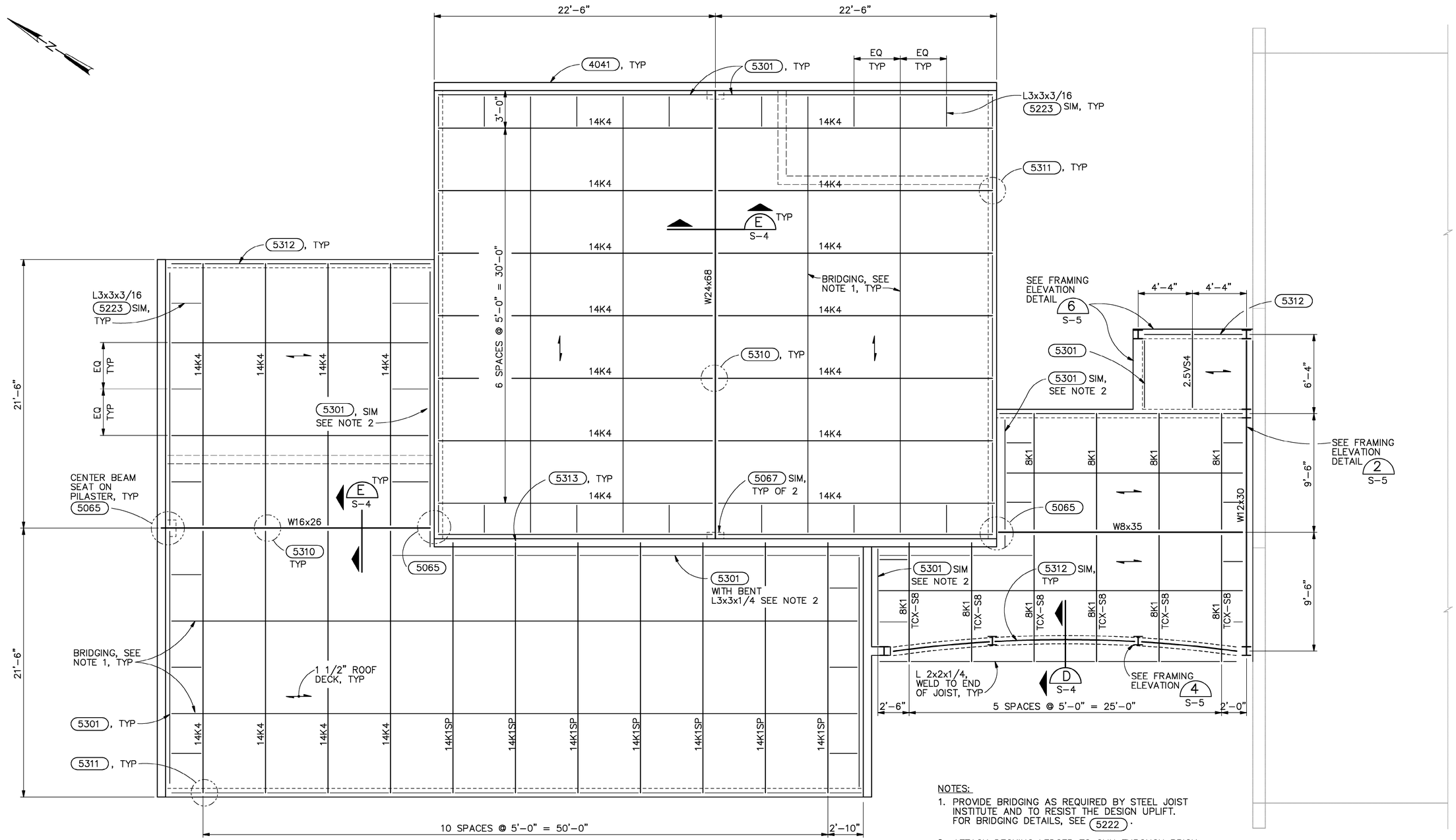

NOTES:

1. PROVIDE BRIDGING AS REQUIRED BY STEEL JOIST INSTITUTE AND TO RESIST THE DESIGN UPLIFT. FOR BRIDGING DETAILS, SEE (5222).
2. ATTACH DECKING LEDGER TO CMU THROUGH BRICK WITH 7/8" ADHESIVE ANCHORS AT 1'-6" OC. EMBED ANCHOR IN CMU 5".

ROOF FRAMING PLAN

1/4"=1'-0"

DSGN D.R.LANGE						VERIFY SCALE
DR M.A.REICHERT						BAR IS ONE INCH ON ORIGINAL DRAWING. 0 1"
CHK R.A.GERMAINE						IF NOT ONE INCH ON THIS SHEET, ADJUST SCALES ACCORDINGLY.
APVD K.K.HARGREAVES	NO.	DATE	REVISION	BY	APVD	

CH2MHILL

126 ARW ILLINOIS AIR NATIONAL GUARD
SCOTT AIR FORCE BASE, IL
PROJECT NUMBER VDYF989075
KC-135 FLIGHT TRAINING UNIT

STRUCTURAL

ROOF FRAMING PLAN

SHEET	21
DWG	S-2
DATE	MAY 2001
PROJ	160085.B1

FILENAME: 0085s02d.dlv PLOT DATE:18-JUL-2001 PLOT TIME:07:43:55

BID DOCUMENTS

REUSE OF DOCUMENTS: THIS DOCUMENT, AND THE IDEAS AND DESIGNS INCORPORATED HEREIN, AS AN INSTRUMENT OF PROFESSIONAL SERVICE, IS THE PROPERTY OF CH2M HILL AND IS NOT TO BE USED, IN WHOLE OR IN PART, FOR ANY OTHER PROJECT WITHOUT THE WRITTEN AUTHORIZATION OF CH2MHILL.
©CH2M HILL

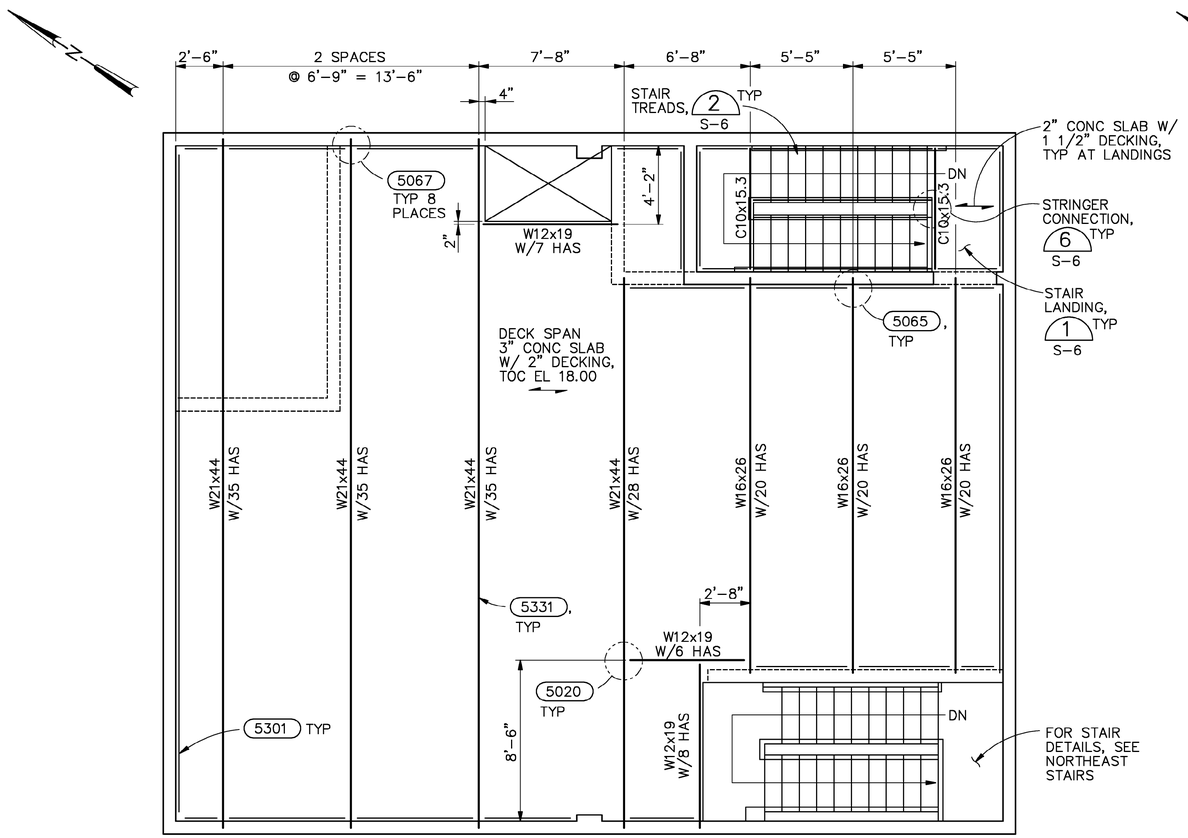

SECOND FLOOR FRAMING PLAN

1/4"=1'-0"

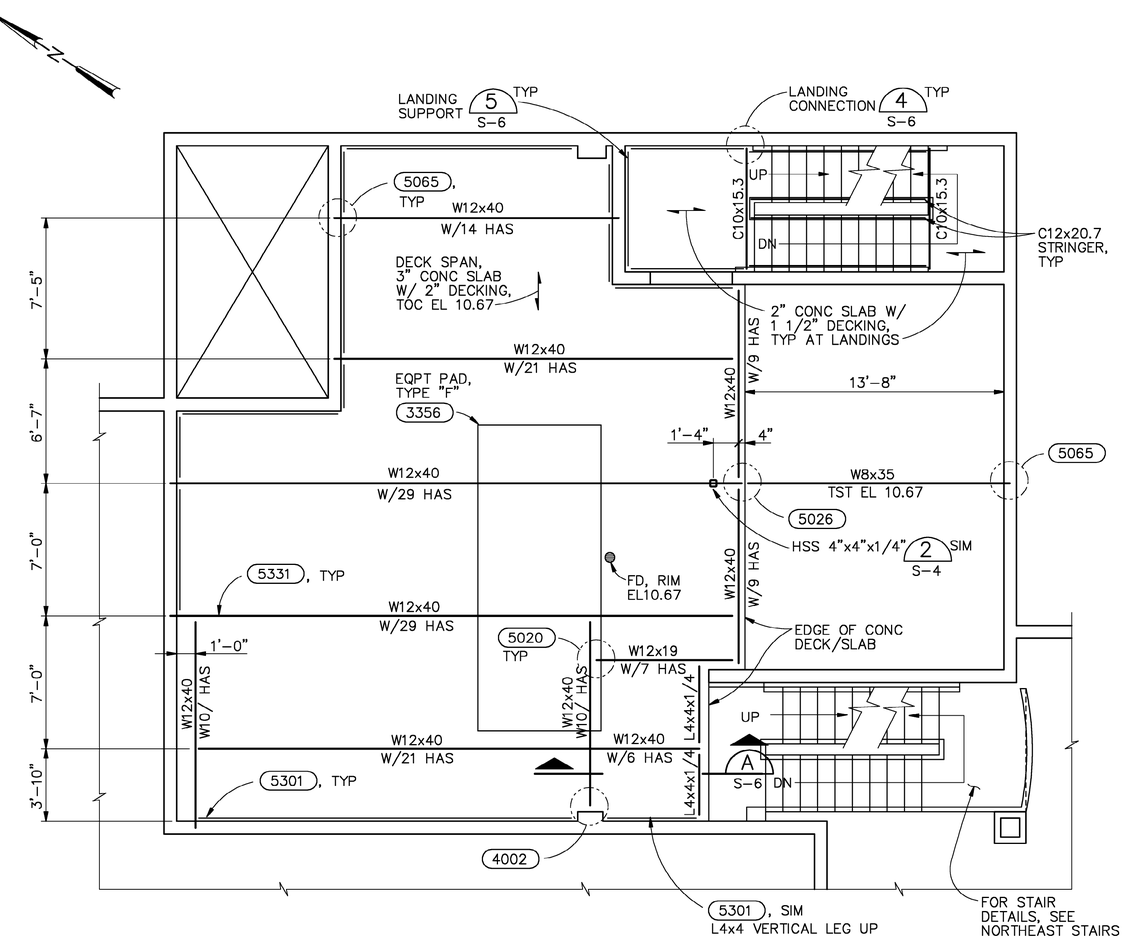

HVAC MEZZANINE FRAMING PLAN

1/4"=1'-0"

NOTE:

1. REINFORCE CONCRETE SLABS, INCLUDING STAIR LANDINGS WITH 4x4 – W2.9xW2.9 WWF, 3/4" COVER.

©CH2M HILL

REUSE OF DOCUMENTS: THIS DOCUMENT, AND THE IDEAS AND DESIGNS INCORPORATED HEREIN, AS AN INSTRUMENT OF PROFESSIONAL SERVICE, IS THE PROPERTY OF CH2M HILL AND IS NOT TO BE USED, IN WHOLE OR IN PART, FOR ANY OTHER PROJECT WITHOUT THE WRITTEN AUTHORIZATION OF CH2MHILL.

BID DOCUMENTS

DSGN D.R.LANGE					
DR M.A.REICHERT					
CHK R.A.GERMAINE					
APVD K.K.HARGREAVES	NO.	DATE	REVISION	BY	APVD

VERIFY SCALE
BAR IS ONE INCH ON ORIGINAL DRAWING.
0 1"
IF NOT ONE INCH ON THIS SHEET, ADJUST SCALES ACCORDINGLY.

CH2MHILL

126 ARW ILLINOIS AIR NATIONAL GUARD
SCOTT AIR FORCE BASE, IL
PROJECT NUMBER VDYF989075
KC-135 FLIGHT TRAINING UNIT

STRUCTURAL

SECOND FLOOR AND HVAC MEZZANINE FRAMING PLANS

SHEET	22
DWG	S-3
DATE	MAY 2001
PROJ	160085.B1

FILENAME: 0085s03d.dlv PLOT DATE: 18-JUL-2001 PLOT TIME: 07:44:01

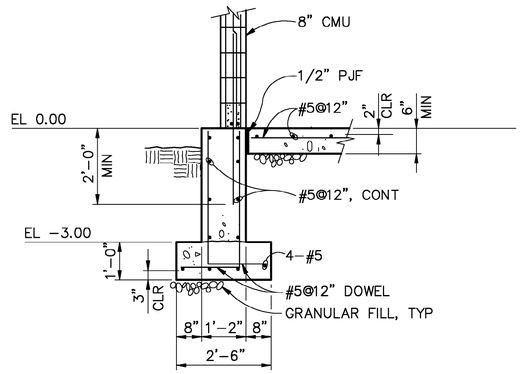

SECTION A
1/2"=1'-0" S-1

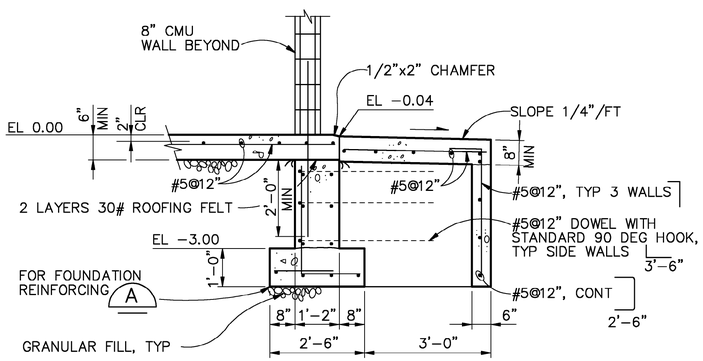

SECTION B
1/2"=1'-0" S-1

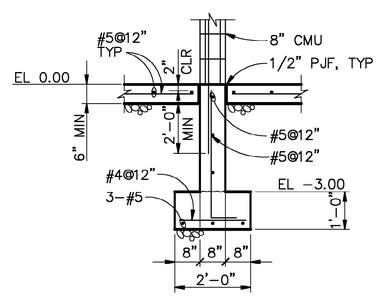

SECTION C
1/2"=1'-0" S-1

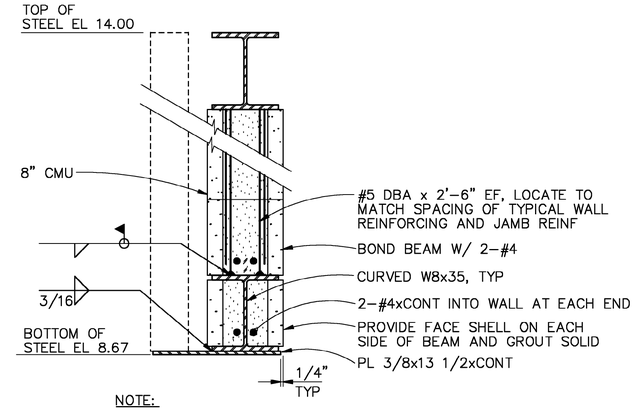

NOTE:
1. CUT BLOCK AS REQUIRED TO MAINTAIN COURSING.

SECTION D
1 1/2"=1'-0" S-2,S-5

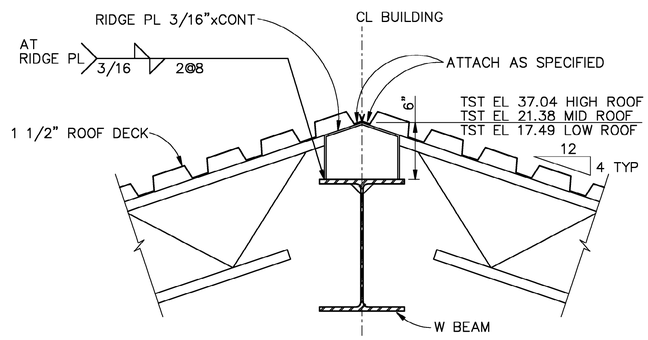

SECTION E
1 1/2"=1'-0" S-2

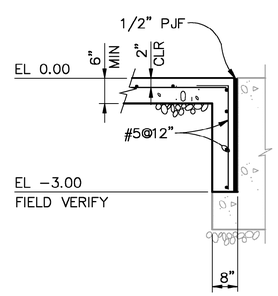

SECTION F
1/2"=1'-0" S-1

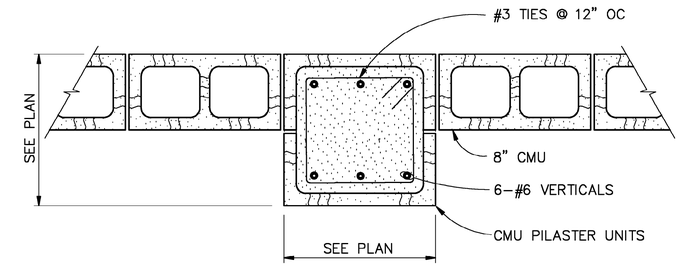

PLAN

NOTE:
1. PROVIDE #6 DOWELS IN FOUNDATION
TO MATCH CMU REINFORCING.

PILASTER DETAIL 1
1 1/2"=1'-0" S-1,S-6

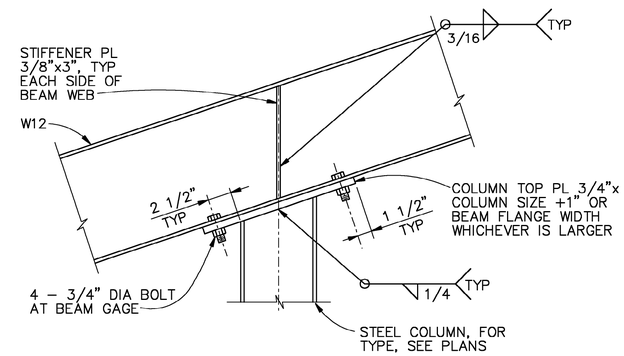

CONNECTION DETAIL 2
1 1/2"=1'-0" S-3,S-5

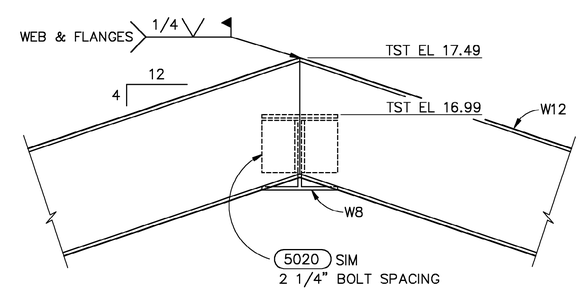

CONNECTION DETAIL 3
1 1/2"=1'-0" S-5

DSGN D.R.LANGE						VERIFY SCALE
DR M.A.REICHERT						BAR IS ONE INCH ON ORIGINAL DRAWING. 0 1"
CHK R.A.GERMAINE						IF NOT ONE INCH ON THIS SHEET, ADJUST SCALES ACCORDINGLY.
APVD K.K.HARGREAVES	NO.	DATE	REVISION	BY	APVD	

CH2MHILL

126 ARW ILLINOIS AIR NATIONAL GUARD
SCOTT AIR FORCE BASE, IL
PROJECT NUMBER VDYF989075
KC-135 FLIGHT TRAINING UNIT

STRUCTURAL

SECTIONS AND DETAILS

SHEET 23
DWG S-4
DATE MAY 2001
PROJ 160085.B1

FILENAME: 0085s04d.dlv PLOT DATE: 18-JUL-2001 PLOT TIME: 07:44:06

BID DOCUMENTS

REUSE OF DOCUMENTS: THIS DOCUMENT, AND THE IDEAS AND DESIGNS INCORPORATED HEREIN, AS AN INSTRUMENT OF PROFESSIONAL SERVICE, IS THE PROPERTY OF CH2M HILL AND IS NOT TO BE USED, IN WHOLE OR IN PART, FOR ANY OTHER PROJECT WITHOUT THE WRITTEN AUTHORIZATION OF CH2MHILL.
©CH2M HILL

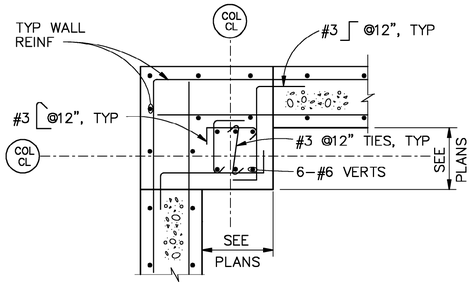

CORNER PEDESTAL

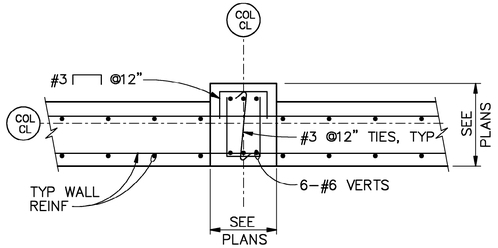

INTERIOR PEDESTAL

NOTES:

1. REINFORCEMENT VERTICALS SHALL INCLUDE DOWELS. DOWELS FOR PEDESTALS EXTEND TO FOUNDATION BOTTOM REINFORCEMENT WITH STANDARD 90° HOOK, SIMILAR TO WALL DOWELS. LAP DOWELS WITH CMU PILASTER VERTS, 2'–6" MINIMUM.
2. ALL WALL HORIZONTAL BARS SHALL EXTEND THRU PILASTERS.
3. PEDESTAL TOP OF CONCRETE EL 0.00 UNLESS SHOWN OTHERWISE.

COLUMN PEDESTAL DETAIL 1
3/4"=1'–0" S–1,S–6

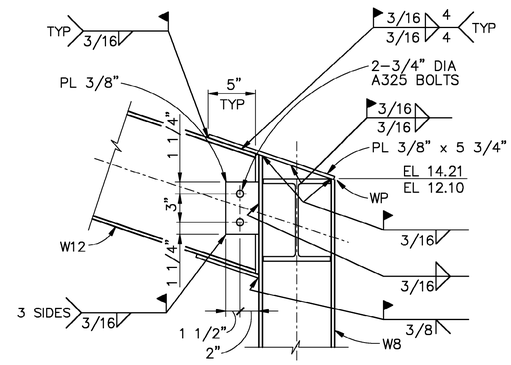

CONNECTION DETAIL 3
1 1/2"=1'–0"

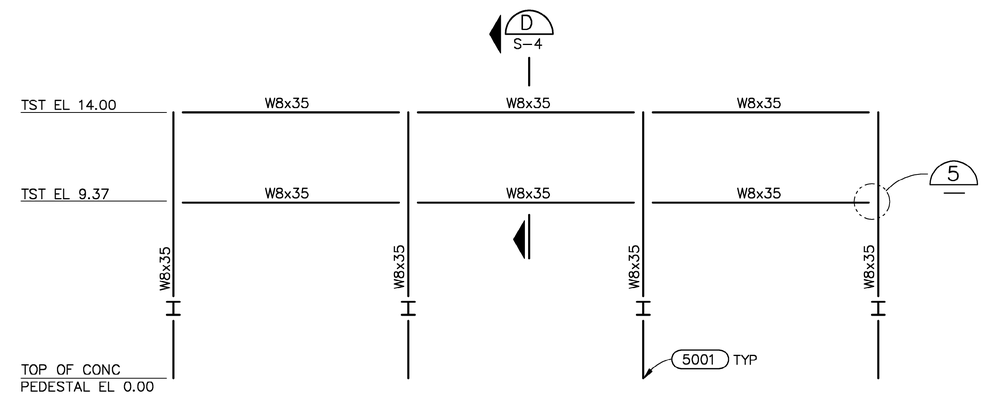

LOOKING NORTHEAST

FRAMING ELEVATION 4
1/4"=1'–0" S–1,S–2

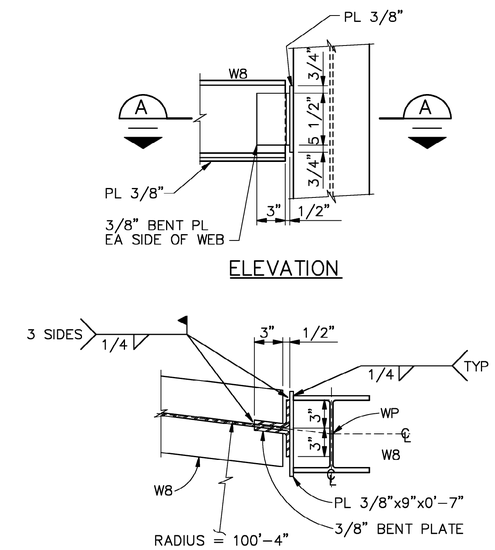

ELEVATION

SECTIONAL PLAN A

CONNECTION DETAIL 5
1 1/2"=1'–0"

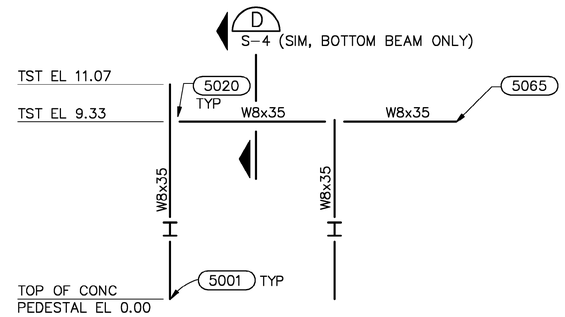

LOOKING SOUTHWEST

FRAMING ELEVATION 6
1/4"=1'–0" S–1,S–2

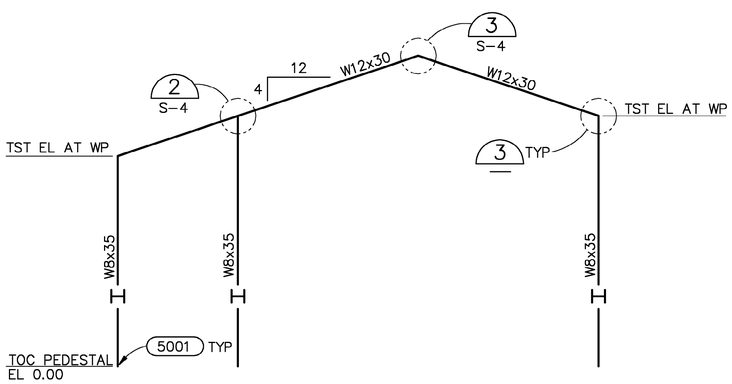

LOOKING SOUTHEAST

FRAMING ELEVATION 2
1/4"=1'–0" S–1,S–2

DSGN D.R.LANGE						VERIFY SCALE
DR M.A.REICHERT						BAR IS ONE INCH ON ORIGINAL DRAWING. 0 1"
CHK R.A.GERMAINE						IF NOT ONE INCH ON THIS SHEET, ADJUST SCALES ACCORDINGLY.
APVD K.K.HARGREAVES	NO.	DATE	REVISION	BY	APVD	

CH2MHILL

126 ARW ILLINOIS AIR NATIONAL GUARD
SCOTT AIR FORCE BASE, IL
PROJECT NUMBER VDYF989075
KC–135 FLIGHT TRAINING UNIT

STRUCTURAL
FRAMING ELEVATIONS AND DETAILS

SHEET 24
DWG S–5
DATE MAY 2001
PROJ 160085.B1

FILENAME: 0085s05d.dlv PLOT DATE: 18–JUL–2001 PLOT TIME: 07:44:12

BID DOCUMENTS

REUSE OF DOCUMENTS: THIS DOCUMENT, AND THE IDEAS AND DESIGNS INCORPORATED HEREIN, AS AN INSTRUMENT OF PROFESSIONAL SERVICE, IS THE PROPERTY OF CH2M HILL AND IS NOT TO BE USED, IN WHOLE OR IN PART, FOR ANY OTHER PROJECT WITHOUT THE WRITTEN AUTHORIZATION OF CH2MHILL.
©CH2M HILL

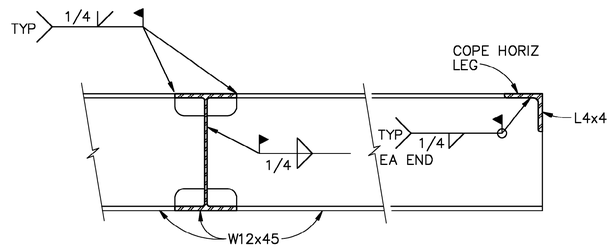

SECTION A
1 1/2"=1'-0" S-3

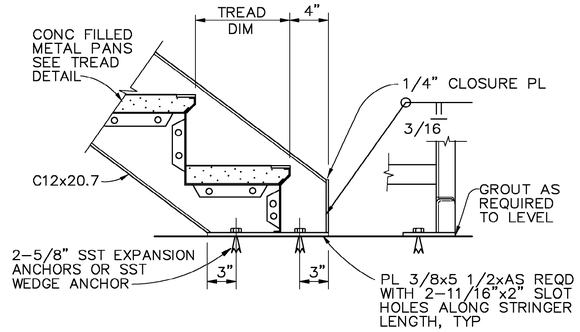

BOTTOM CONNECTION DETAIL 3
1 1/2"=1'-0" S-1

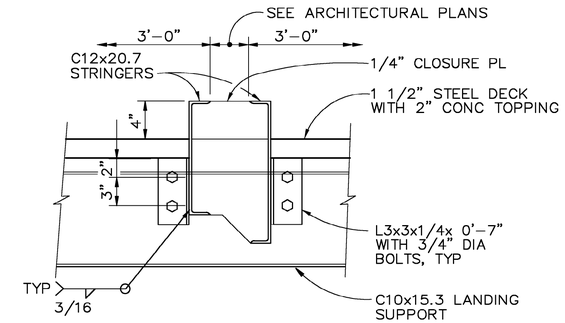

STRINGER CONNECTION DETAIL 6
1 1/2"=1'-0" S-3

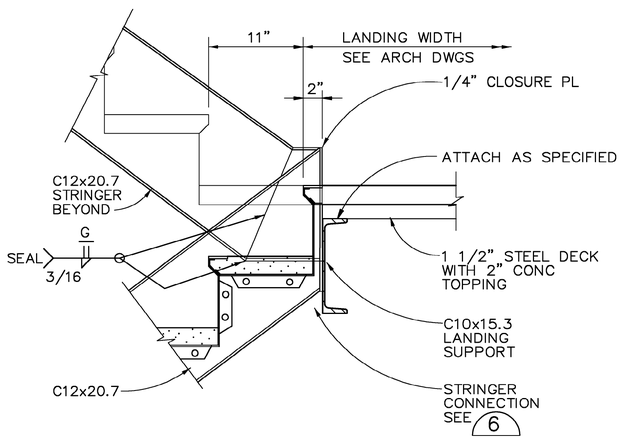

LANDING DETAIL 1
1 1/2"=1'-0" S-3

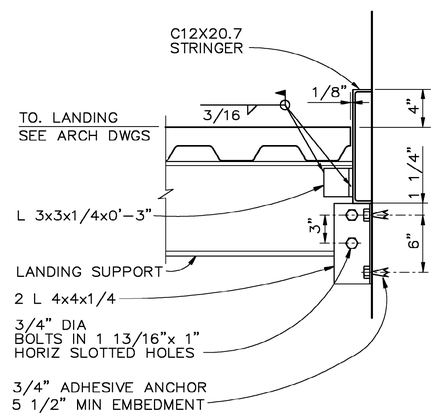

LANDING CONNECTION DETAIL 4
1 1/2"=1'-0" S-3

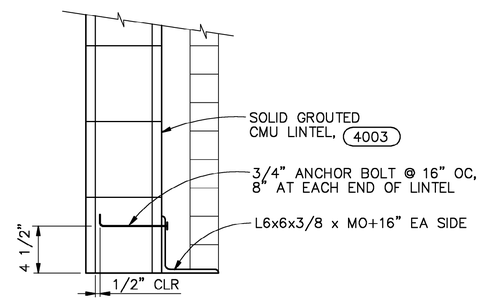

SECTION B
1 1/2"=1'-0"

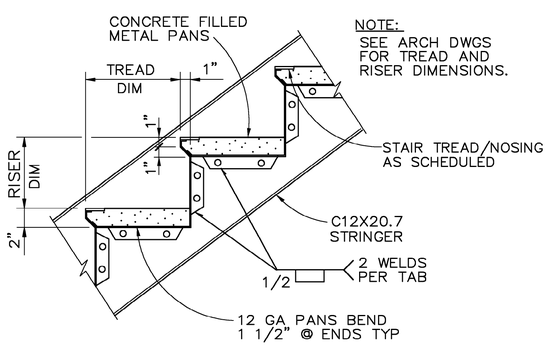

TREAD DETAIL 2
1 1/2"=1'-0" S-3

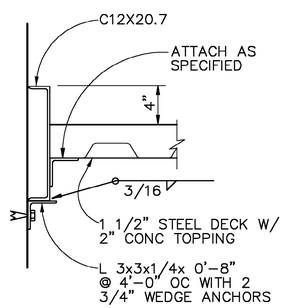

LANDING SUPPORT DETAIL 5
1 1/2"=1'-0" S-3

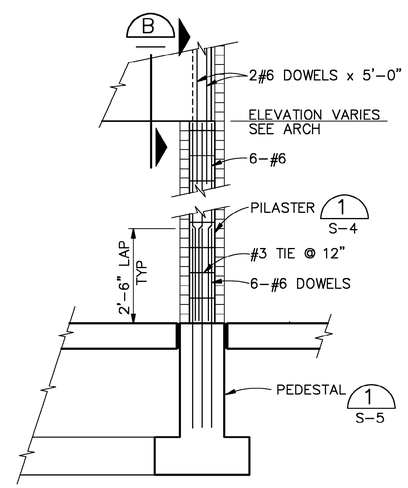

ELEVATION
1/2"=1'-0"

COLUMN DETAIL 7
S-1

DSGN D.R.LANGE						VERIFY SCALE
DR M.A.REICHERT						BAR IS ONE INCH ON ORIGINAL DRAWING. 0 1"
CHK R.A.GERMAINE						IF NOT ONE INCH ON THIS SHEET, ADJUST SCALES ACCORDINGLY.
APVD K.K.HARGREAVES	NO.	DATE	REVISION	BY	APVD	

CH2MHILL

126 ARW ILLINOIS AIR NATIONAL GUARD
SCOTT AIR FORCE BASE, IL
PROJECT NUMBER VDYF989075
KC-135 FLIGHT TRAINING UNIT

STRUCTURAL

SECTION AND DETAILS

SHEET 25
DWG S-6
DATE MAY 2001
PROJ 160085.B1

FILENAME: 0085s06d.dlv PLOT DATE: 18-JUL-2001 PLOT TIME: 07:44:18

BID DOCUMENTS

REUSE OF DOCUMENTS: THIS DOCUMENT, AND THE IDEAS AND DESIGNS INCORPORATED HEREIN, AS AN INSTRUMENT OF PROFESSIONAL SERVICE, IS THE PROPERTY OF CH2M HILL AND IS NOT TO BE USED, IN WHOLE OR IN PART, FOR ANY OTHER PROJECT WITHOUT THE WRITTEN AUTHORIZATION OF CH2MHILL.
©CH2M HILL

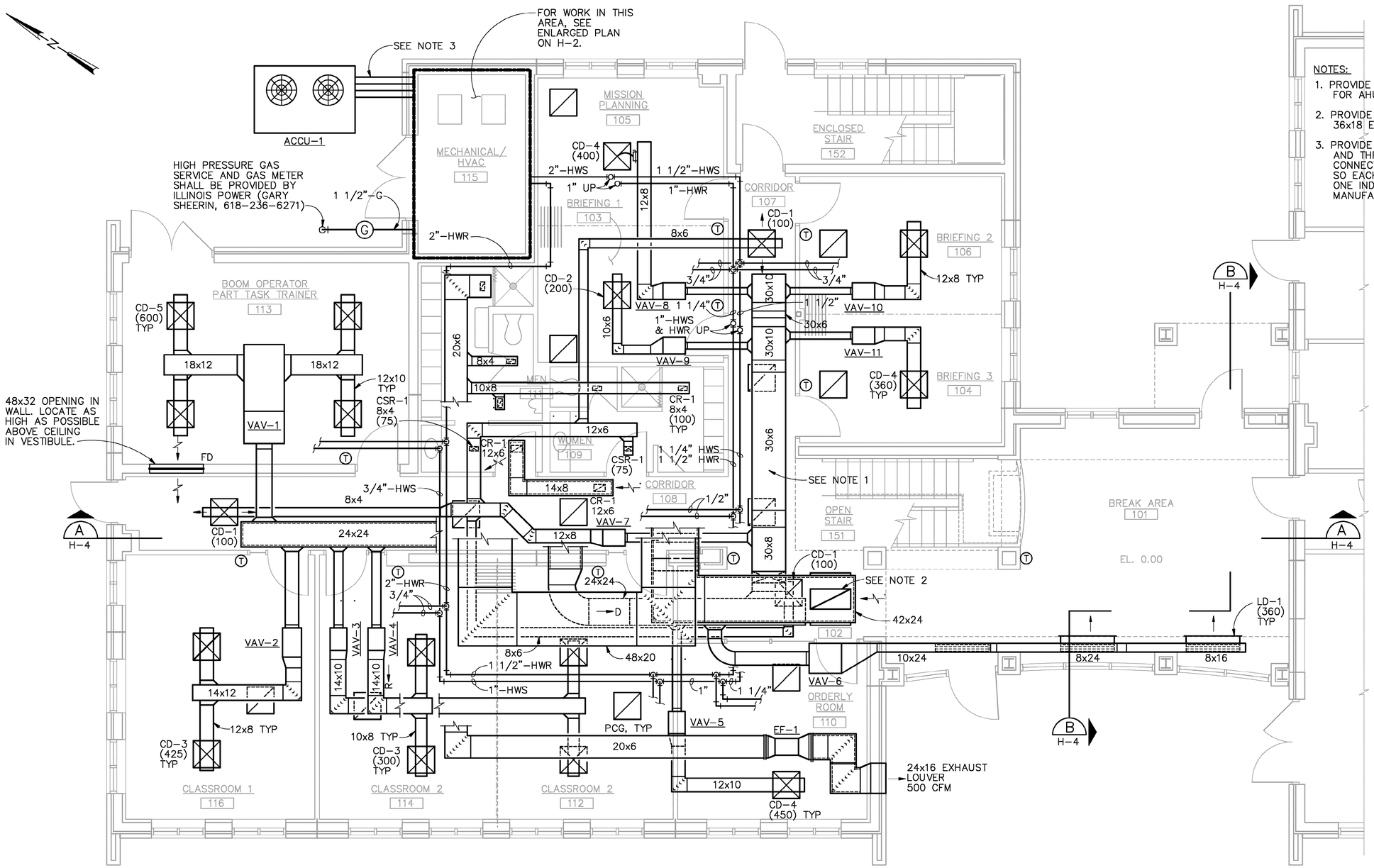

NOTES:

1. PROVIDE DUCT MOUNTED STATIC PRESSURE SENSOR FOR AHU-1.
2. PROVIDE ONE TOP AND TWO SIDE OPENINGS, 36x18 EACH.
3. PROVIDE 2 PAIRS OF REFRIGERANT PIPING ON GROUND AND THROUGH EXTERIOR WALL. PROVIDE REQUIRED CONNECTIONS AND HARDWARE AT ACCU-1 AND AHU-1 SO EACH PAIR OF REFRIGERANT PIPES SERVES ONE INDEPENDENT CIRCUIT. COMPLY WITH MANUFACTURER'S INSTRUCTIONS.

FIRST FLOOR HVAC PLAN

1/4"=1'-0"

DSGN M.H.PRATT						
DR M.H.PRATT						
CHK M.RAHMAN						
APVD K.K.HARGREAVES	NO.	DATE	REVISION	BY	APVD	

VERIFY SCALE
BAR IS ONE INCH ON ORIGINAL DRAWING.
0 1"
IF NOT ONE INCH ON THIS SHEET, ADJUST SCALES ACCORDINGLY.

CH2MHILL

126 ARW ILLINOIS AIR NATIONAL GUARD
SCOTT AIR FORCE BASE, IL
PROJECT NUMBER VDYF989075
KC-135 FLIGHT TRAINING UNIT

BUILDING SERVICES

FIRST FLOOR HVAC PLAN

SHEET	26
DWG	H-1
DATE	MAY 2001
PROJ	160085.B1

FILENAME: 0085h01d.dlv PLOT DATE: 18-JUL-2001 PLOT TIME: 07:45:22

BID DOCUMENTS

REUSE OF DOCUMENTS: THIS DOCUMENT, AND THE IDEAS AND DESIGNS INCORPORATED HEREIN, AS AN INSTRUMENT OF PROFESSIONAL SERVICE, IS THE PROPERTY OF CH2M HILL AND IS NOT TO BE USED, IN WHOLE OR IN PART, FOR ANY OTHER PROJECT WITHOUT THE WRITTEN AUTHORIZATION OF CH2MHILL.
©CH2M HILL

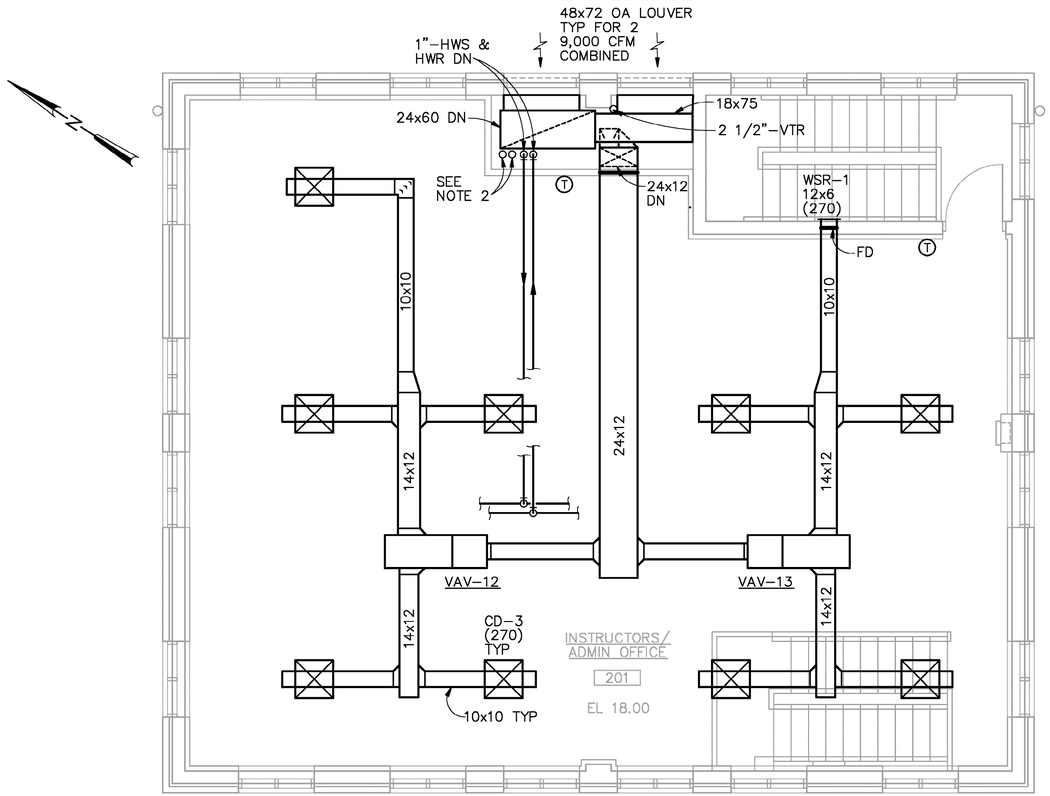

SECOND FLOOR HVAC PLAN

1/4"=1'–0"

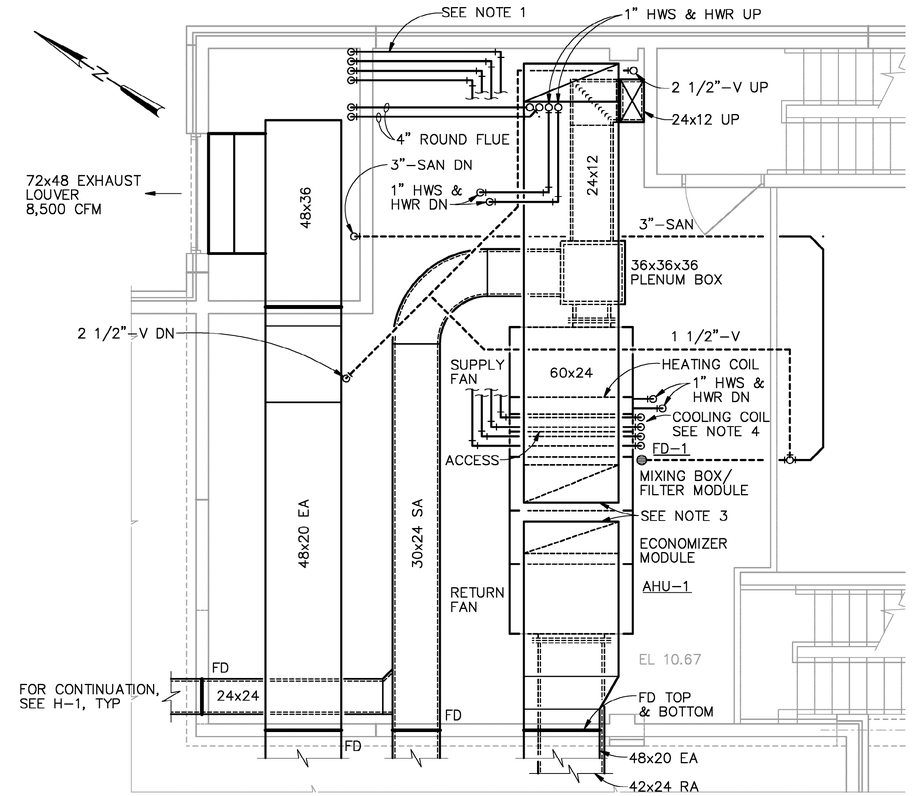

HVAC MEZZANINE PLAN

1/4"=1'–0"

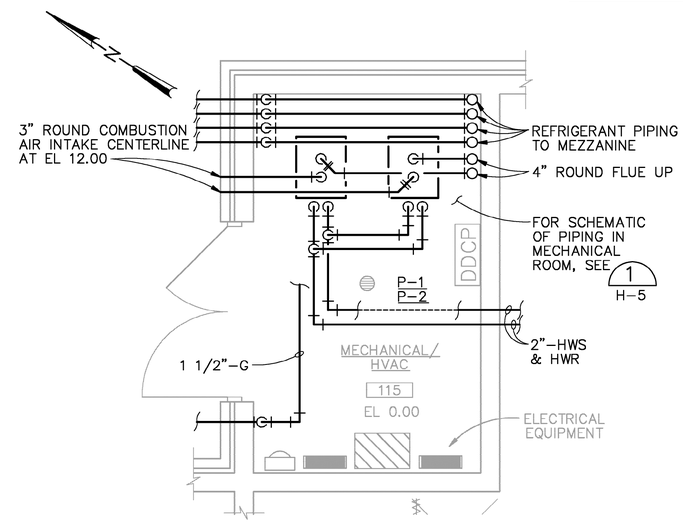

MECHANICAL ROOM PLAN

3/8"=1'–0"

NOTES:

1. REFRIGERANT SUCTION AND LIQUID PIPING. PROVIDE TWO PAIRS OF PIPE, ONE PAIR FOR EACH INDEPENDENT REFRIGERANT CIRCUIT. CONNECT TO ACCU–1 AND AHU–1 PER MANUFACTURER'S INSTRUCTIONS. INSTALL PIPING AS HIGH AS POSSIBLE.
2. 4" ROUND FLUE THRU ROOF WITH VENT CAP.
3. PROVIDE FLEXIBLE DUCT AT CONNECTION TO UNIT.
4. PROVIDE 1 1/2"–CD FROM COOLING COIL TO FLOOR DRAIN PER DETAIL 15446

DSGN M.H.PRATT						VERIFY SCALE
DR M.H.PRATT						BAR IS ONE INCH ON ORIGINAL DRAWING. 0 1"
CHK M.RAHMAN						IF NOT ONE INCH ON THIS SHEET, ADJUST SCALES ACCORDINGLY.
APVD K.K.HARGREAVES	NO.	DATE	REVISION	BY	APVD	

CH2MHILL

126 ARW ILLINOIS AIR NATIONAL GUARD
SCOTT AIR FORCE BASE, IL
PROJECT NUMBER VDYF989075
KC–135 FLIGHT TRAINING UNIT

BUILDING SERVICES
SECOND FLOOR,
HVAC MEZZANINE AND
MECHANICAL ROOM PLANS

SHEET	27
DWG	H–2
DATE	MAY 2001
PROJ	160085.B1

FILENAME: 0085h02d.dlv PLOT DATE: 18–JUL–2001 PLOT TIME: 07:45:28

BID DOCUMENTS

REUSE OF DOCUMENTS: THIS DOCUMENT, AND THE IDEAS AND DESIGNS INCORPORATED HEREIN, AS AN INSTRUMENT OF PROFESSIONAL SERVICE, IS THE PROPERTY OF CH2M HILL AND IS NOT TO BE USED, IN WHOLE OR IN PART, FOR ANY OTHER PROJECT WITHOUT THE WRITTEN AUTHORIZATION OF CH2MHILL.
©CH2M HILL

NOTES:

1. FLIGHT SIMULATOR BUILDING AND EXISTING PIPING SHOWN FOR CLARITY. FIELD VERIFY LOCATIONS AND DIMENSIONS PRIOR TO START OF CONSTRUCTION.
2. CONNECT 4" SAN FROM FLIGHT TRAINING UNIT TO FLOOR CLEANOUT IN BREAK ROOM. REMOVE CONCRETE SLAB AND EXCAVATE AS REQUIRED. OBTAIN EXISTING INVERT ELEVATIONS FROM AS-BUILT DRAWINGS. BACKFILL AND PATCH CONCRETE FLOOR SLAB TO MATCH EXISTING.
3. PROVIDE W, HW, AND HWC PIPING AND CONNECT TO EXISTING PIPING. ROUTE PIPING ABOVE EXISTING LAY-IN TILE CEILING. CONNECT HWC TO EXISTING SYSTEM PER (15435). LOCATE PUMP P-3 IN JANITOR'S CLOSET.
4. PROVIDE DRY-PIPE AND WET-PIPE FS PIPING ABOVE EXISTING LAY-IN TILE CEILING. CONNECT TO EXISTING FS RISER IN MECHANICAL ROOM OF FLIGHT SIMULATOR BUILDING. MODIFY EXISTING FS RISER SO FLIGHT TRAINING UNIT AND BOPTT ARE SEPARATE ZONES. SEE DETAIL (15456)(15458).
5. PROVIDE INSPECTOR'S TEST DRAIN AND VALVE IN JANITOR'S CLOSET PER NFPA 13. ROUTE DRAIN PIPING TO JANITOR'S SINK.

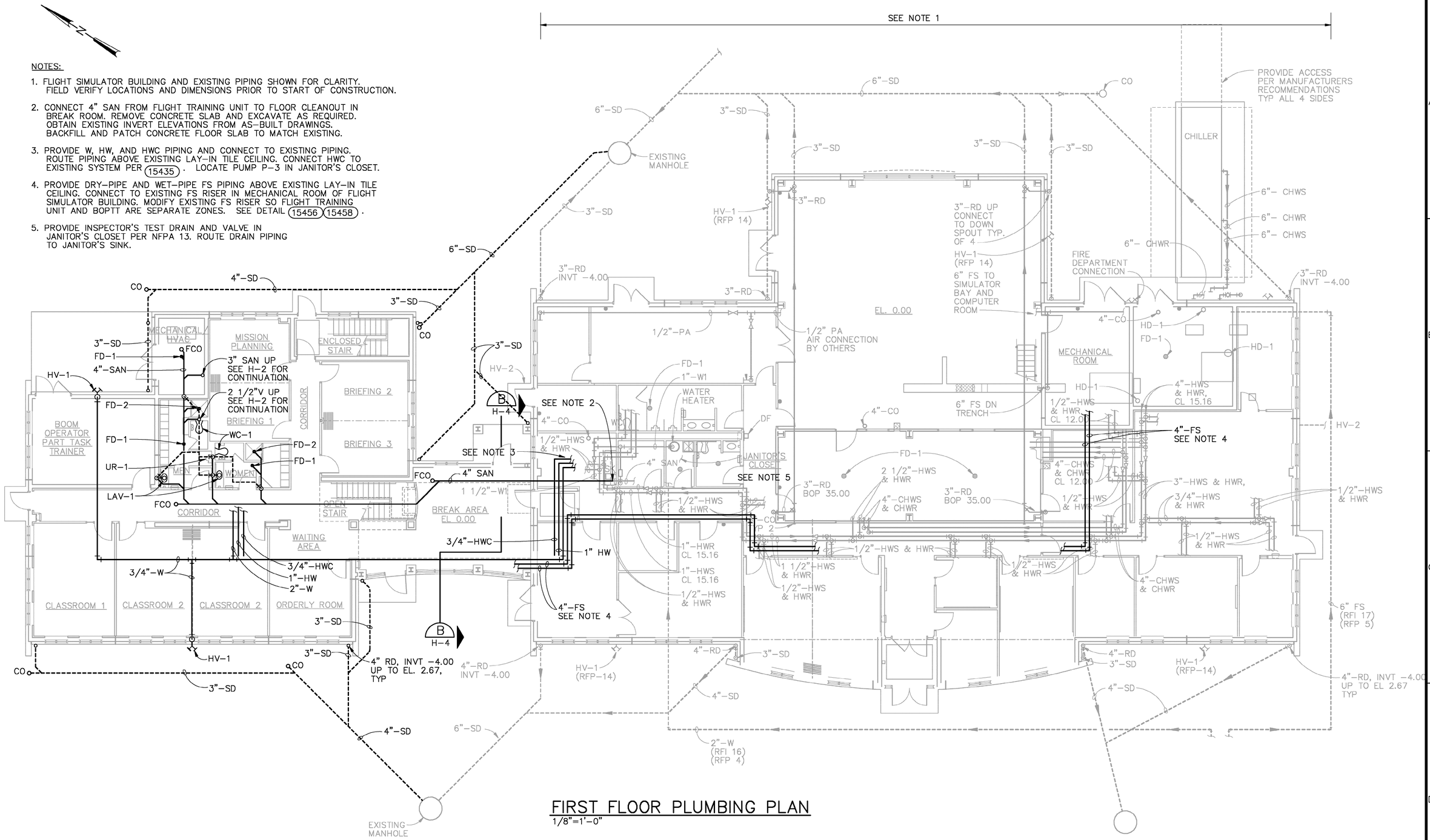

FIRST FLOOR PLUMBING PLAN

1/8"=1'-0"

DSGN M.H.PRATT						VERIFY SCALE
DR L.SHAFFER						BAR IS ONE INCH ON ORIGINAL DRAWING. 0 1"
CHK M.RAHMAN						IF NOT ONE INCH ON THIS SHEET, ADJUST SCALES ACCORDINGLY.
APVD K.K.HARGREAVES	NO.	DATE	REVISION	BY	APVD	

CH2MHILL

126 ARW ILLINOIS AIR NATIONAL GUARD
SCOTT AIR FORCE BASE, IL
PROJECT NUMBER VDYF989075
KC-135 FLIGHT TRAINING UNIT

BUILDING SERVICES

FIRST FLOOR PLUMBING PLAN

SHEET	28
DWG	H-3
DATE	MAY 2001
PROJ	160085.B1

FILENAME: 0085h03d.dlv PLOT DATE: 18-JUL-2001 PLOT TIME: 07:45:35

BID DOCUMENTS

REUSE OF DOCUMENTS: THIS DOCUMENT, AND THE IDEAS AND DESIGNS INCORPORATED HEREIN, AS AN INSTRUMENT OF PROFESSIONAL SERVICE, IS THE PROPERTY OF CH2M HILL AND IS NOT TO BE USED, IN WHOLE OR IN PART, FOR ANY OTHER PROJECT WITHOUT THE WRITTEN AUTHORIZATION OF CH2MHILL.
©CH2M HILL

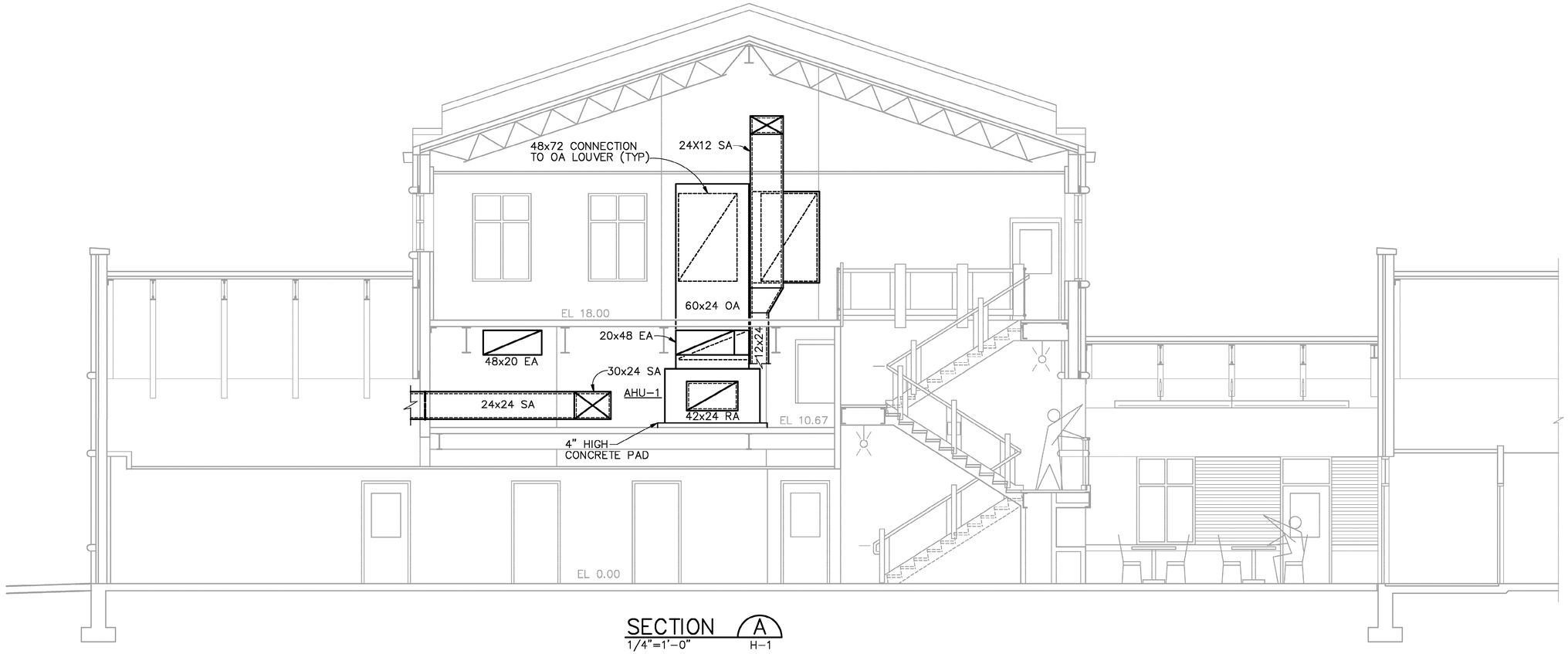

SECTION A
1/4"=1'-0" H-1

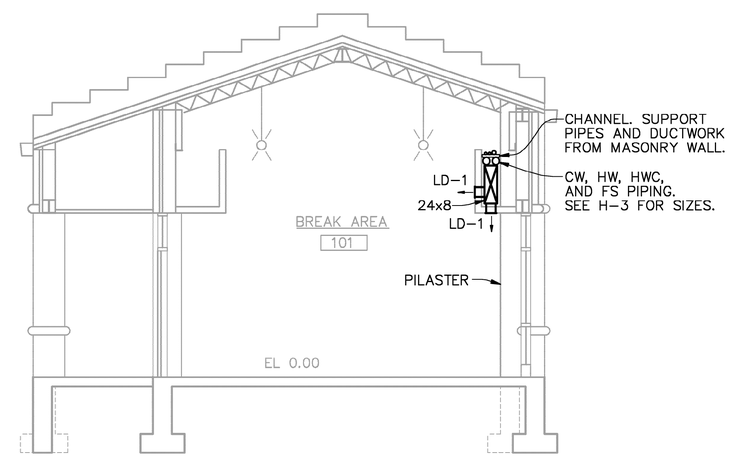

SECTION B
1/4"=1'-0" H-1, H-3

DSGN M.H.PRATT						VERIFY SCALE
DR M.H.PRATT						BAR IS ONE INCH ON ORIGINAL DRAWING. 0 1" IF NOT ONE INCH ON THIS SHEET, ADJUST SCALES ACCORDINGLY.
CHK M.RAHMAN						
APVD K.K.HARGREAVES	NO.	DATE	REVISION	BY	APVD	

CH2MHILL

126 ARW ILLINOIS AIR NATIONAL GUARD
SCOTT AIR FORCE BASE, IL
PROJECT NUMBER VDYF989075
KC-135 FLIGHT TRAINING UNIT

BUILDING SERVICES

SECTIONS

SHEET	29
DWG	H-4
DATE	MAY 2001
PROJ	160085.B1

FILENAME: 0085h04d.dlv PLOT DATE: 18-JUL-2001 PLOT TIME: 07:45:41

BID DOCUMENTS

REUSE OF DOCUMENTS: THIS DOCUMENT, AND THE IDEAS AND DESIGNS INCORPORATED HEREIN, AS AN INSTRUMENT OF PROFESSIONAL SERVICE, IS THE PROPERTY OF CH2M HILL AND IS NOT TO BE USED, IN WHOLE OR IN PART, FOR ANY OTHER PROJECT WITHOUT THE WRITTEN AUTHORIZATION OF CH2MHILL.
©CH2M HILL

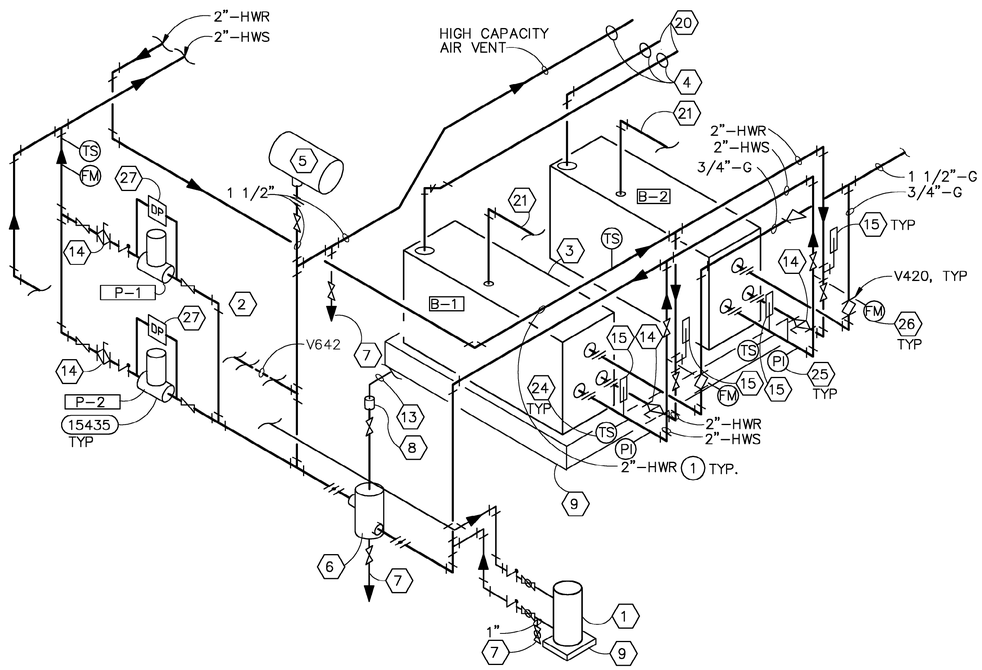

HEATING WATER SYSTEM PIPING DETAIL 1

NTS

H–2

1. CHEMICAL POT FEEDER (FLOOR MOUNTED)
2. WATER MAKE–UP
3. RELIEF VALVE DISCHARGE, ROUTE TO FLOOR DRAIN
4. WALL SLEEVE, SEE 15604
5. EXPANSION TANK
6. AIR SEPARATOR, WITHOUT STRAINER
7. 1"–DRAIN LINE, ROUTE TO FLOOR DRAIN
8. AUTOMATIC AIR VENT
9. 4" HIGH CONC PAD
10. NOT USED
11. BELLOWS TYPE EXPANSION JOINT
12. NOT USED
13. 3/4"–VENT, FIELD ROUTE TO DRAIN
14. FLOW MEASURING AND BALANCE FITTING
15. THERMOMETER
17. PRESSURE TEMPERATURE TEST PLUG
18. STRAINER WITH BALL VALVE AND PLUG
19. COND DRAIN W/TRAP, ROUTE TO FLOOR DRAIN
20. 4" BOILER STACK
21. 3" INTAKE VENT, THRU ROOF, WITH VENT CAP
22. AIR VENT
23. DIFFERENTIAL PRESSURE SENSOR AI
24. TEMPERATURE SENSOR AI
25. PRESSURE INDICATOR
26. FLOW METER AI
27. DIFFERENTIAL PRESSURE SENSOR, AI

DSGN M.H.PRATT						
DR L. SHAFFER						
CHK M.RAHMAN						
APVD K.K.HARGREAVES	NO.	DATE	REVISION	BY	APVD	

VERIFY SCALE
BAR IS ONE INCH ON ORIGINAL DRAWING.
0 1"
IF NOT ONE INCH ON THIS SHEET, ADJUST SCALES ACCORDINGLY.

CH2MHILL

126 ARW ILLINOIS AIR NATIONAL GUARD
SCOTT AIR FORCE BASE, IL
PROJECT NUMBER VDYF989075
KC–135 FLIGHT TRAINING UNIT

BUILDING SERVICES
HEATING WATER SYSTEM
PIPING DETAIL

SHEET 30
DWG H–5
DATE MAY 2001
PROJ 160085.B1

FILENAME: 0085h05d.dlv PLOT DATE: 18–JUL–2001 PLOT TIME: 07:45:58

BID DOCUMENTS

REUSE OF DOCUMENTS: THIS DOCUMENT, AND THE IDEAS AND DESIGNS INCORPORATED HEREIN, AS AN INSTRUMENT OF PROFESSIONAL SERVICE, IS THE PROPERTY OF CH2M HILL AND IS NOT TO BE USED, IN WHOLE OR IN PART, FOR ANY OTHER PROJECT WITHOUT THE WRITTEN AUTHORIZATION OF CH2MHILL.
©CH2M HILL

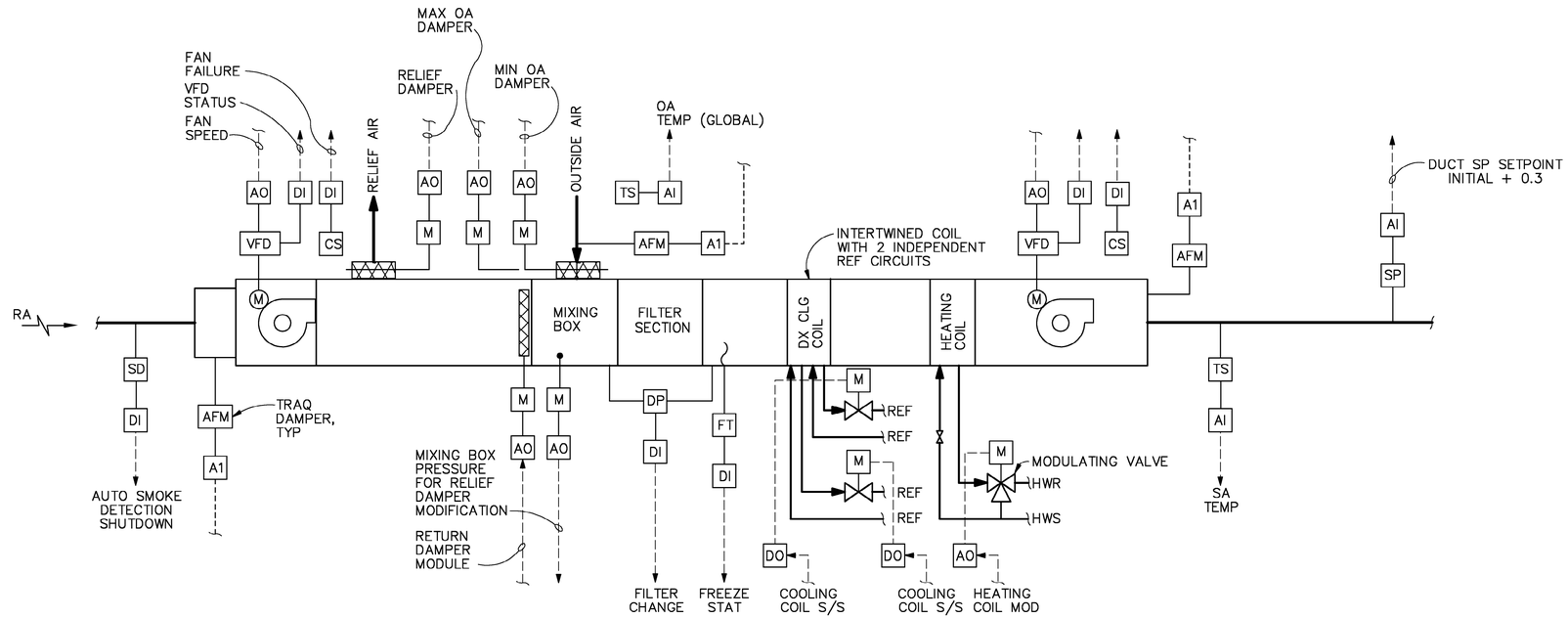

VARIABLE AIR VOLUME WITH TERMINAL REHEAT AHU-1

NTS

CONTROL LEGEND

SYMBOL	DESCRIPTION
TS	TEMPERATURE SENSOR
RH	RELATIVE HUMIDITY SENSOR
DP	DIFFERENTIAL PRESSURE SENSOR
M	MOTORIZED DAMPER
AFM	AIR FLOW MONITOR
VFD	VARIABLE FREQUENCY DRIVE
S/S	START/STOP
ACV	AUTOMATIC CONTROL VALVE
SP	STATIC PRESSURE SENSOR
FRZ	FREEZE STAT
SD	SMOKE DETECTOR
AI	ANALOG INPUT
AO	ANALOG OUTPUT
CS	CURRENT SWITCH
TI	TEMPERATURE INDICATOR

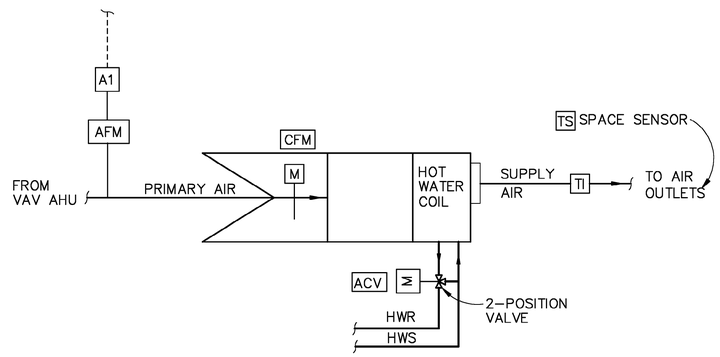

VARIABLE AIR VOLUME TERMINAL UNIT

NTS

THIS DOCUMENT, AND THE IDEAS AND DESIGNS INCORPORATED HEREIN, AS AN INSTRUMENT OF PROFESSIONAL SERVICE, IS THE PROPERTY OF CH2M HILL AND IS NOT TO BE USED, IN WHOLE OR IN PART, FOR ANY OTHER PROJECT WITHOUT THE WRITTEN AUTHORIZATION OF CH2MHILL.
©CH2M HILL
REUSE OF DOCUMENTS:

BID DOCUMENTS

DSGN M.H.PRATT						
DR S. KORCSMAROS						
CHK M.RAHMAN						
APVD K.K.HARGREAVES	NO.	DATE	REVISION	BY	APVD	

VERIFY SCALE
BAR IS ONE INCH ON ORIGINAL DRAWING.
0 1"
IF NOT ONE INCH ON THIS SHEET, ADJUST SCALES ACCORDINGLY.

CH2MHILL

126 ARW ILLINOIS AIR NATIONAL GUARD
SCOTT AIR FORCE BASE, IL
PROJECT NUMBER VDYF989075
KC-135 FLIGHT TRAINING UNIT

BUILDING SERVICES

HVAC CONTROLS

SHEET 31
DWG H-6
DATE MAY 2001
PROJ 160085.B1

FILENAME: 0085h06d.dlv PLOT DATE: 18-JUL-2001 PLOT TIME: 07:46:34

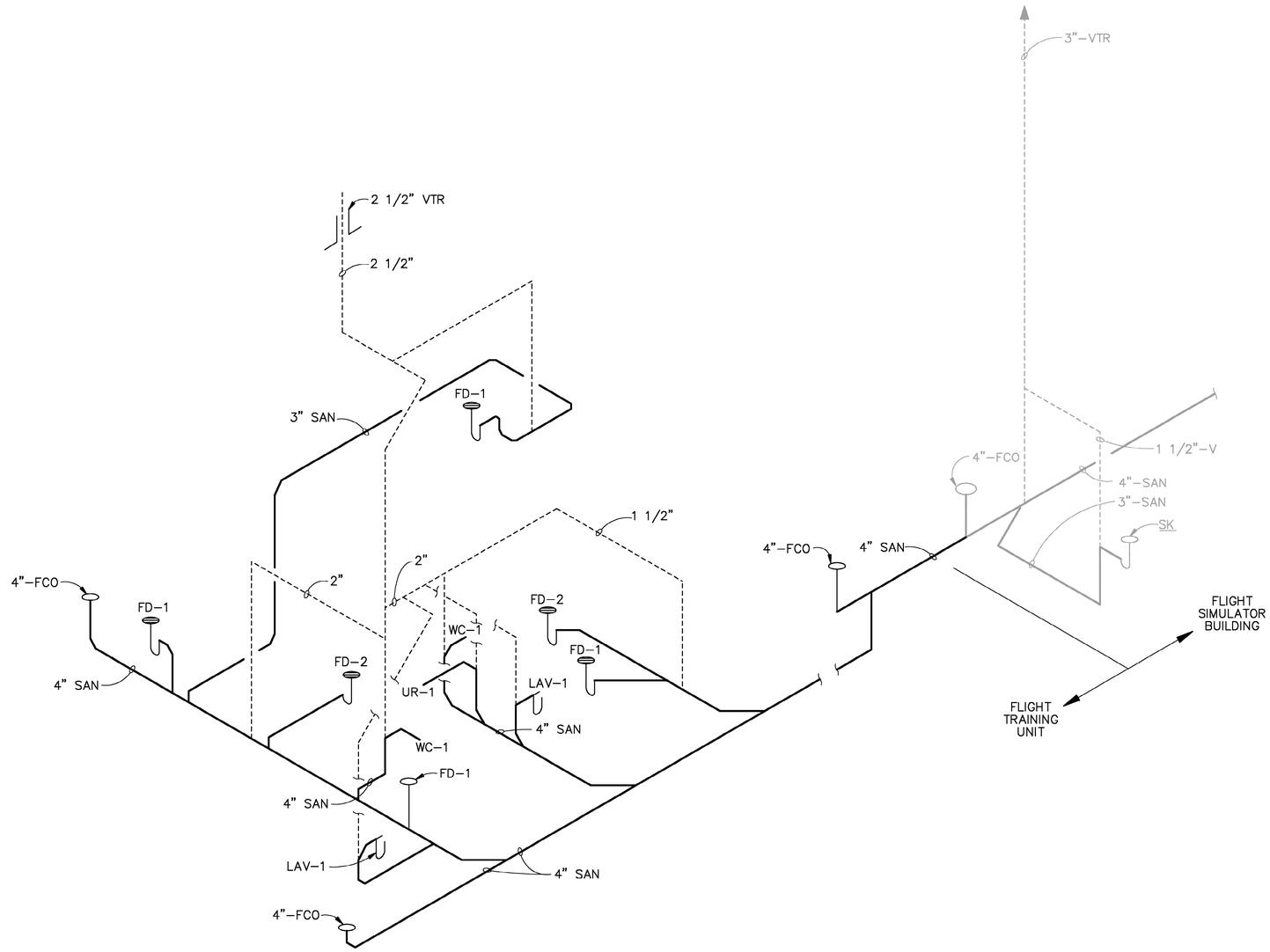

SANITARY SEWER RISER DIAGRAM

NTS

DSGN M.H.PRATT						VERIFY SCALE
DR L. SHAFFER						BAR IS ONE INCH ON ORIGINAL DRAWING. 0 1" IF NOT ONE INCH ON THIS SHEET, ADJUST SCALES ACCORDINGLY.
CHK M.RAHMAN						
APVD K.K.HARGREAVES	NO.	DATE	REVISION	BY	APVD	

CH2MHILL

126 ARW ILLINOIS AIR NATIONAL GUARD
SCOTT AIR FORCE BASE, IL
PROJECT NUMBER VDYF989075
KC–135 FLIGHT TRAINING UNIT

BUILDING SERVICES
SANITARY SEWER RISER DIAGRAM

SHEET	32
DWG	H–7
DATE	MAY 2001
PROJ	160085.B1

FILENAME: 0085h07d.dlv PLOT DATE: 18–JUL–2001 PLOT TIME: 07:46:44

BID DOCUMENTS

REUSE OF DOCUMENTS: THIS DOCUMENT, AND THE IDEAS AND DESIGNS INCORPORATED HEREIN, AS AN INSTRUMENT OF PROFESSIONAL SERVICE, IS THE PROPERTY OF CH2M HILL AND IS NOT TO BE USED, IN WHOLE OR IN PART, FOR ANY OTHER PROJECT WITHOUT THE WRITTEN AUTHORIZATION OF CH2MHILL.
©CH2M HILL

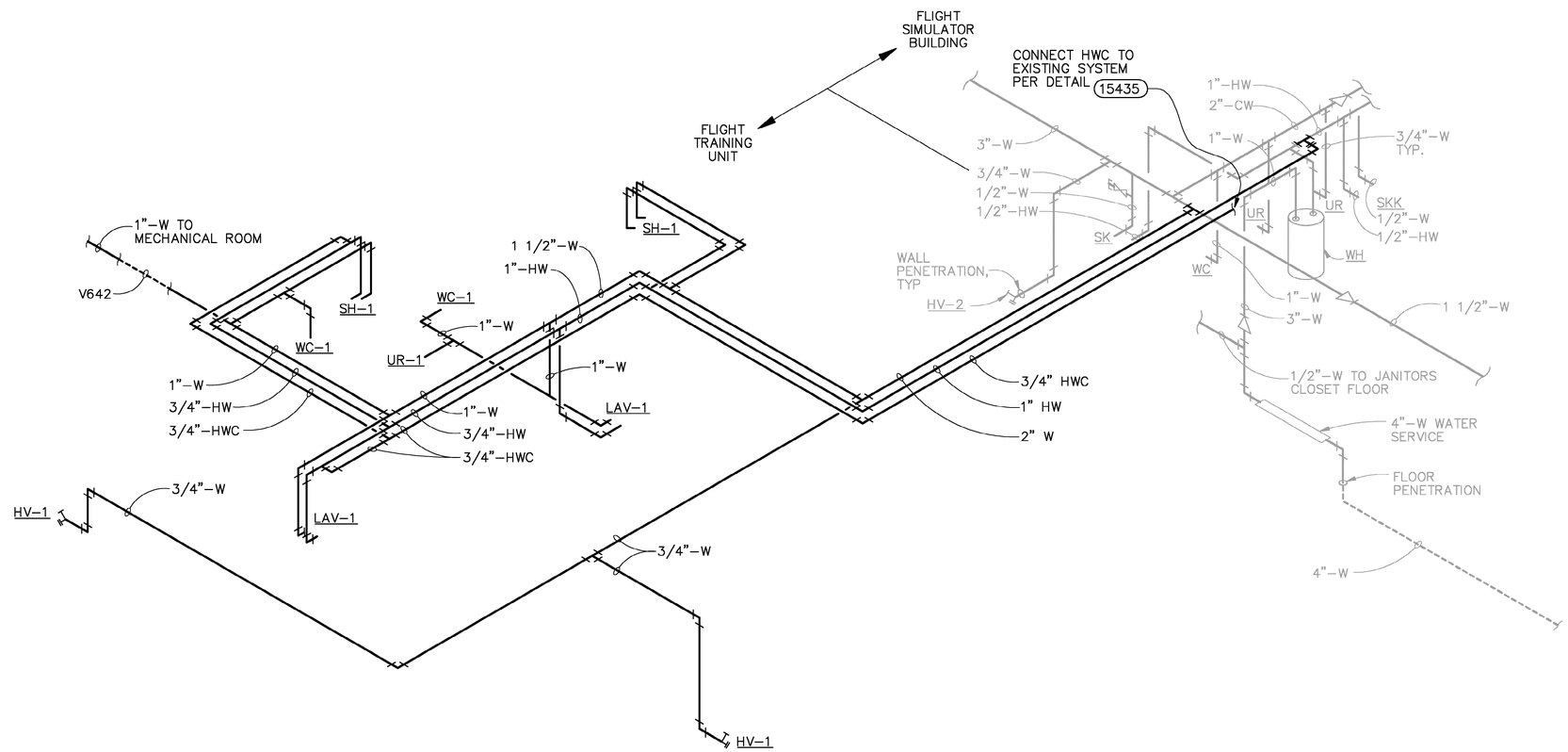

WATER SUPPLY RISER DIAGRAM

NTS

DSGN M.H.PRATT						VERIFY SCALE
DR L. SHAFFER						BAR IS ONE INCH ON ORIGINAL DRAWING. 0 1"
CHK M.RAHMAN						IF NOT ONE INCH ON THIS SHEET, ADJUST SCALES ACCORDINGLY.
APVD K.K.HARGREAVES	NO.	DATE	REVISION	BY	APVD	

CH2MHILL

126 ARW ILLINOIS AIR NATIONAL GUARD
SCOTT AIR FORCE BASE, IL
PROJECT NUMBER VDYF989075
KC-135 FLIGHT TRAINING UNIT

BUILDING SERVICES
WATER SUPPLY
RISER DIAGRAM

SHEET 33
DWG H-8
DATE MAY 2001
PROJ 160085.B1

FILENAME: 0085h08d.dlv PLOT DATE: 18-JUL-2001 PLOT TIME: 07:46:53

BID DOCUMENTS

REUSE OF DOCUMENTS: THIS DOCUMENT, AND THE IDEAS AND DESIGNS INCORPORATED HEREIN, AS AN INSTRUMENT OF PROFESSIONAL SERVICE, IS THE PROPERTY OF CH2M HILL AND IS NOT TO BE USED, IN WHOLE OR IN PART, FOR ANY OTHER PROJECT WITHOUT THE WRITTEN AUTHORIZATION OF CH2MHILL.
©CH2M HILL

PLUMBING FIXTURE SCHEDULE

SYMBOL	FIXTURE TYPE	RUNOUT SIZES			
		CW	HW	W	V
LAV–1	LAVATORY	1/2	1/2	1 1/4	1 1/2
SH–1	SHOWER	1/2	1/2	2	1 1/4
WC–1	WATER CLOSET	1	–	4	2
UR–1	URINAL	1	–	4	2
FD–1	FLOOR DRAIN	–	–	3	1 1/2
FD–2	SHOWER DRAIN	–	–	2	1 1/4

VARIABLE AIR VOLUME TERMINAL UNITS

SYMBOL	AREA SERVED	AIR DATA					HEATING COIL DATA										MAX. N.C.	MANUFACTURER AND MODEL NO.
							AIR SIDE					WATER SIDE						
		MAX. CFM	MIN. CFM	SUPPLY TEMP. DEG. F	INLET SIZE IN. DIA.	DELTA P IN. W.G.	CAP. MBH	ROWS	CFM	EAT DEG. F	LAT DEG. F	GPM	EWT	LWT	DELTA P FT. H20	PIPE RUNOUTS		
VAV–1	BOOM OPERATOR PART TASK TRAINER	2,400	350	55	14	0.2	13.3	1	350	55	90	1.3	190	170	2.0	3/4"	35	TRANE VCWE
VAV–2	CLASSROOM 1	850	430	55	10	0.2	16.3	1	430	55	90	1.6	190	170	2.0	3/4"	35	TRANE VCWE
VAV–3	CLASSROOM 2	600	200	55	8	0.2	7.6	1	200	55	90	0.8	190	170	2.0	1/2"	35	TRANE VCWE
VAV–4	CLASSROOM 3	600	200	55	8	0.2	7.6	1	200	55	90	0.8	190	170	2.0	1/2"	35	TRANE VCWE
VAV–5	ORDERLY ROOM	450	240	55	8	0.2	9.1	1	240	55	90	0.9	190	170	2.0	1/2"	35	TRANE VCWE
VAV–6	BREAK AREA	1800	750	55	12	0.2	28.5	1	750	55	90	2.9	190	170	2.0	3/4"	35	TRANE VCWE
VAV–7	CORRIDOR/RESTROOMS	450	190	55	8	0.2	7.2	1	190	55	90	0.7	190	170	2.0	1/2"	35	TRANE VCWE
VAV–8	MISSION PLANNING	400	170	55	6	0.2	6.5	1	170	55	90	0.7	190	170	2.0	1/2"	35	TRANE VCWE
VAV–9	BRIEFING 1	200	75	55	6	0.2	2.5	1	75	55	90	0.3	190	170	2.0	1/2"	35	TRANE VCWE
VAV–10	BRIEFING 2	330	110	55	6	0.2	4.2	1	110	55	90	0.4	190	170	2.0	1/2"	35	TRANE VCWE
VAV–11	BRIEFING 3	330	110	55	6	0.2	4.2	1	110	55	90	0.4	190	170	2.0	1/2"	35	TRANE VCWE
VAV–12	2ND FLOOR OPEN OFFICE (NW SIDE)	1,350	850	55	10	0.2	32.3	1	850	55	90	3.2	190	170	2.0	3/4"	35	TRANE VCWE
VAV–13	2ND FLOOR OPEN OFFICE (SE SIDE)	1,350	850	55	10	0.2	32.3	1	850	55	90	3.2	190	170	2.0	3/4"	35	TRANE VCWE

PUMPS

SYMBOL	LOCATION	SERVICE	TYPE	PUMP DATA		MOTOR DATA				CONTROLLED BY	MANUFACTURER AND MODEL	REMARKS
				GPM	P.D. FT. WG.	HP	RPM	VOLT	PH			
P–1	MECH RM	HEATING WATER	INLINE CENTRIFUGAL	22	25	1/3	1750	115	1	HOA SWITCH	TACO MODEL 1610	
P–2	MECH RM	HEATING WATER	INLINE CENTRIFUGAL	22	25	1/3	1750	115	1	HOA SWITCH	TACO MODEL 1610	
P–3	JAN. CLOSET	HW RECIRC.	INLINE CARTRIDGE	3	7	1/40	3250	115	1	HOA SWITCH	TACO MODEL 006	

REMARKS:

FANS

SYMBOL	LOCATION	SERVICE	TYPE	FAN DATA				MOTOR DATA			CONTROLLED BY	MANUFACTURER AND MODEL	REMARKS
				CFM	ESP IN. WG.	FAN RPM	DRIVE	HP	VOLT	PH			
EF–1	ORDERLY RM	EXHAUST	INLINE CENTRIFUGAL	500	0.25	1430	BELT	1/4	115	1	HOA SWITCH	GREENHECK BSQ–80	NOTE 1

REMARKS:

NOTE 1: PROVIDE FACTORY WIRED MOTOR OPERATED DAMPER.

AIR HANDLING UNIT

SYMBOL	FAN DATA								MOTOR DATA			DX COOLING COIL										HOT WATER HEATING COIL DATA									MAX WEIGHT LBS.	MANUFACTURER AND MODEL NO.	REMARKS
												CAPACITY		No. OF COILS	AIR SIDE						REF SIDE	CAPAC. MBH	AIR SIDE				WATER SIDE						
	SERVICE	MAX. CFM	MIN. CFM	O.A. CFM	TOTAL S.P. IN. WG.	WHEEL DIA. IN.	TYPE	RPM MAX. SPEED	H.P.	VOLT	PH	TOTAL MBH	SENS. MBH		CFM	EAT DEG. F DB	EAT DEG. F WB	LAT DEG. F DB	LAT DEG. F WB	DELTA P IN. WG.	ENT. REF. DEG. F		CFM	EAT DEG. F	LAT DEG. F	DELTA P IN. W.G	GPM	EWT DEG. F	LWT DEG. F	DELTA P FT. H2O			
AHU–1	SUPPLY	9,000	4,500	1,000	3.5	20	FC	965	10	460	3	260	221	2	9,000	77.0	64.0	55.0	54.6	0.80	47.0	58	4,500	63.0	72.8	0.10	4.8	190	170	2.0	4,000	TRANE MCC SIZE 17	NOTES 1,2
	RETURN	8,500	4,000	1,000	0.75	20	FC	620	5	460	3																						

REMARKS:

NOTE 1: DX COOLING COILS SHALL BE INTERTWINED AND HAVE 2 INDEPENDENT CIRCUITS, 6 ROWS, 116 FINS PER FOOT, 536 FPM MAX. FACE VELOCITY.

NOTE 2: PIPING CONNECTIONS TO DX AND HEATING COIL SHALL BE LEFT SIDE OF UNIT (BASED ON FACING THE AIRSTREAM).

NOTE 3: PROVIDE VARIABLE FREQUENCY MOTOR SPEED CONTROLLERS FOR SUPPLY AND RETURN FANS.

AIR COOLED CONDENSING UNIT

SYMBOL	LOCATION	CONDENSER FAN DATA				COMPRESSOR DATA					UNIT ELECTRICAL DATA				MAX WEIGHT LBS	MANUFACTURER AND MODEL NO.	REMARKS
		NO.	FLA (EA)	VOLT	PH NO.	NO.	RLA (EA)	LRA (EA)	VOLT	PH	MCA	MOCP	VOLT	PH			
ACCU–1	GRADE	2	1.8	460	3	2	18.1	117	460	3	44	60	460	1	1,700	TRANE RAUC–C20	NOTE 1

REMARKS:

NOTE 1: PROVIDE SOLENOID VALVE FOR EACH INDEPENDENT REFRIGERANT CIRCUIT AND INTERLOCK WITH ASSOCIATED COMPRESSOR AND DX COIL.

BOILERS

SYMBOL	LOCATION	SERVICE	INPUT MBH	OUTPUT MBH	CFH AT 7 IN WC	MOTOR DATA				MANUFACTURER AND MODEL	REMARKS
						HP	RPM	VOLT	PH		
B–1,2	MECH RM	HEATING WATER	138	110	138	1/4	1750	115	1	BURNHAM MM II 5–140	

REMARKS:

AIR DISTRIBUTION

SYMBOL	TYPE	LOCATION	SIZE		ACCESSORIES		AIR PATTERN			CFM RANGE	MAX. NC	MAX TOTAL P IN. WG.	REMARKS
			NECK	FACE	OBD	PLENUM	BLOW	EXH.	RET.				
CD–1	PERFORATED DIFFUSER	CEILING MOUNTED	6	24x24	X		4			0–110	35	0.03	NOTE 1
CD–2	PERFORATED DIFFUSER	CEILING MOUNTED	8	24x24	X		4			111–200	35	0.05	NOTE 1
CD–3	PERFORATED DIFFUSER	CEILING MOUNTED	10	24x24	X		4			201–320	35	0.06	NOTE 1
CD–4	PERFORATED DIFFUSER	CEILING MOUNTED	12	24x24	X		4			321–470	35	0.07	NOTE 1
CD–5	PERFORATED DIFFUSER	CEILING MOUNTED	14	24x24	X		4			471–640	35	0.08	NOTE 1
LD–1	LINEAR SLOT DIFFUSER	CEILING MOUNTED	12		X	X				0–360	30	0.07	
CSR–1	CEILING SUPPLY REGISTER	CEILING MOUNTED			X		2				35	0.05	NOTE 2
WSR–1	WALL SUPPLY REGISTER	WALL MOUNTED			X		2				35	0.05	NOTE 2
CR–1	CEILING RETURN REGISTER	CEILING MOUNTED			X			X	X		35	0.05	NOTE 2
PCG	PERFORATED CLG. GRILLE	CEILING MOUNTED	22x22	24x24					X	0–1000	20	0.05	

REMARKS:

NOTE 1: PROVIDE 4–WAY BLOW UNLESS INDICATED OTHERWISE ON PLANS.

NOTE 2: NECK SIZE INDICATED ON PLANS.

DSGN M.H.PRATT					
DR M.H.PRATT					
CHK M.RAHMAN					
APVD K.K.HARGREAVES	NO.	DATE	REVISION	BY	APVD

VERIFY SCALE
BAR IS ONE INCH ON ORIGINAL DRAWING.
0 1"
IF NOT ONE INCH ON THIS SHEET, ADJUST SCALES ACCORDINGLY.

CH2MHILL

126 ARW ILLINOIS AIR NATIONAL GUARD
SCOTT AIR FORCE BASE, IL
PROJECT NUMBER VDYF989075
KC–135 FLIGHT TRAINING UNIT

BUILDING SERVICES

SCHEDULES

SHEET 34
DWG H–9
DATE MAY 2001
PROJ 160085.B1

FILENAME: 0085h09d.dlv PLOT DATE: 18–JUL–2001 PLOT TIME: 07:47:00

BID DOCUMENTS

REUSE OF DOCUMENTS: THIS DOCUMENT, AND THE IDEAS AND DESIGNS INCORPORATED HEREIN, AS AN INSTRUMENT OF PROFESSIONAL SERVICE, IS THE PROPERTY OF CH2M HILL AND IS NOT TO BE USED, IN WHOLE OR IN PART, FOR ANY OTHER PROJECT WITHOUT THE WRITTEN AUTHORIZATION OF CH2MHILL.
©CH2M HILL

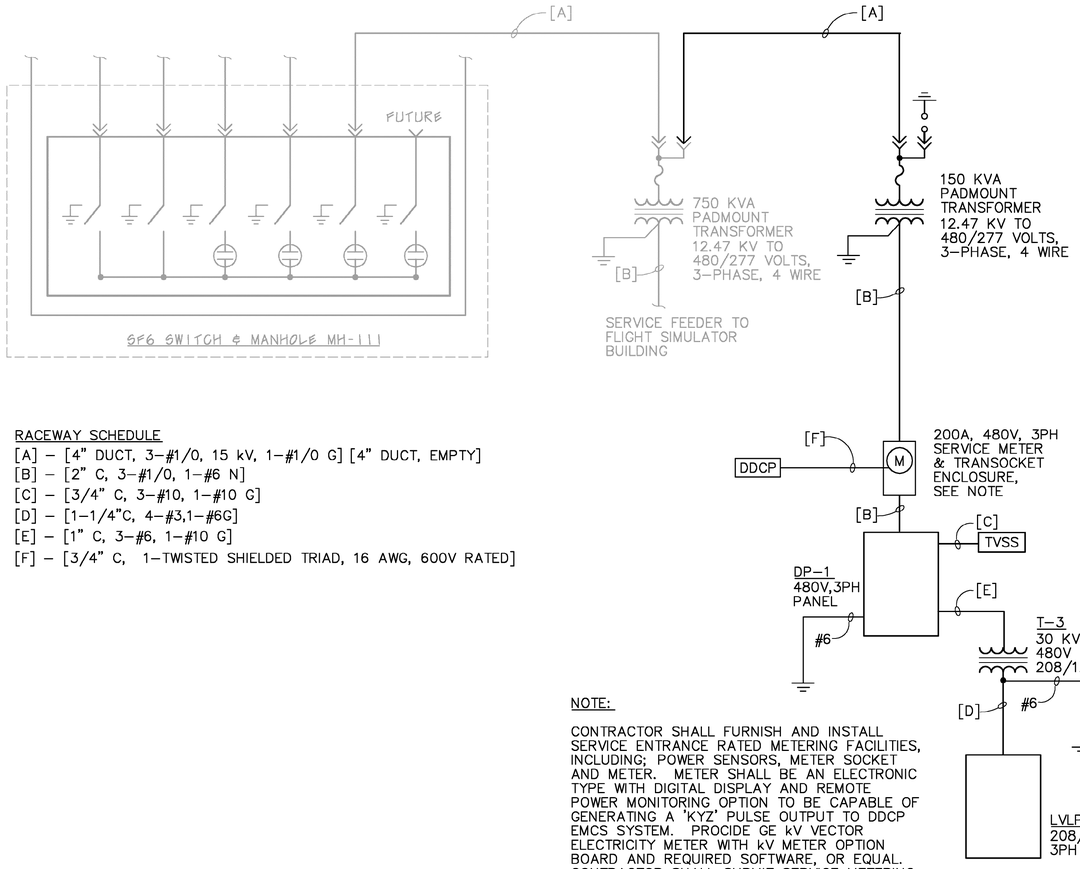

RACEWAY SCHEDULE

[A] – [4" DUCT, 3–#1/0, 15 kV, 1–#1/0 G] [4" DUCT, EMPTY]
[B] – [2" C, 3–#1/0, 1–#6 N]
[C] – [3/4" C, 3–#10, 1–#10 G]
[D] – [1–1/4"C, 4–#3,1–#6G]
[E] – [1" C, 3–#6, 1–#10 G]
[F] – [3/4" C, 1–TWISTED SHIELDED TRIAD, 16 AWG, 600V RATED]

NOTE:

CONTRACTOR SHALL FURNISH AND INSTALL SERVICE ENTRANCE RATED METERING FACILITIES, INCLUDING; POWER SENSORS, METER SOCKET AND METER. METER SHALL BE AN ELECTRONIC TYPE WITH DIGITAL DISPLAY AND REMOTE POWER MONITORING OPTION TO BE CAPABLE OF GENERATING A 'KYZ' PULSE OUTPUT TO DDCP EMCS SYSTEM. PROCIDE GE kV VECTOR ELECTRICITY METER WITH kV METER OPTION BOARD AND REQUIRED SOFTWARE, OR EQUAL. CONTRACTOR SHALL SUBMIT SERVICE METERING FACILITY TO COTR.CM FOR REVIEW AND APPROVAL.

ONE–LINE DIAGRAM

NTS

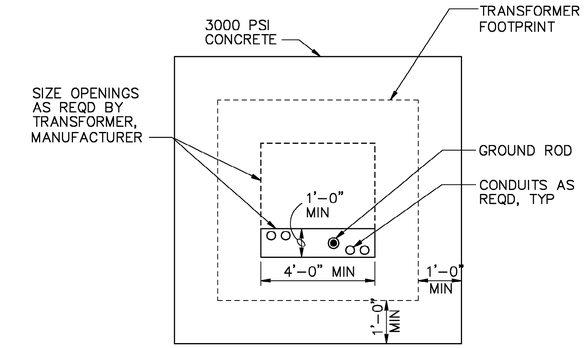

PLAN

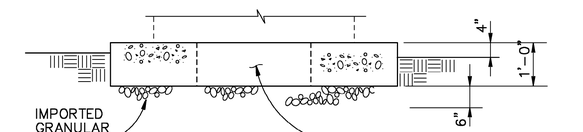

SECTION

NOTES:

1. COORDINATE ALL FINAL PAD DIMENSIONS WITH MANUFACTURER'S APPROVED SHOP DRAWINGS.
2. FOR ADDITIONAL PAD MOUNTED EQUIPMENT GROUNDING REQUIREMENTS SEE 2.

TRANSFORMER PAD 1

NTS C–1

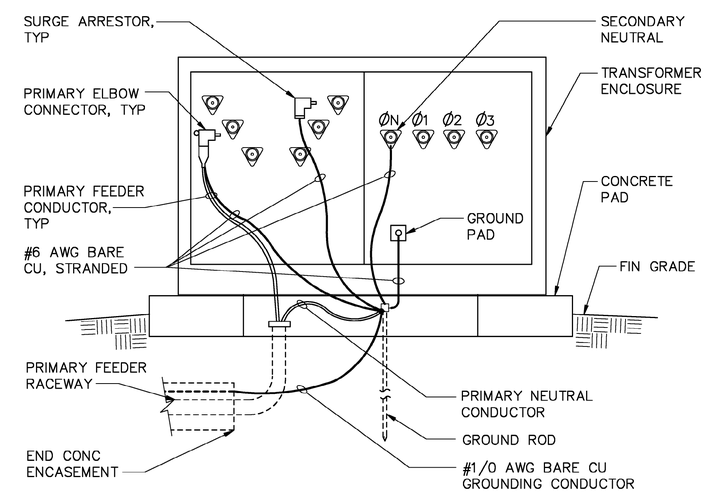

TRANSFORMER GROUNDING 2

NTS C–1

DSGN B.M.WILLIAMS						VERIFY SCALE
DR B.M.WILLIAMS						BAR IS ONE INCH ON ORIGINAL DRAWING. 0 1"
CHK R.E.NAGEL						IF NOT ONE INCH ON THIS SHEET, ADJUST SCALES ACCORDINGLY.
APVD K.K.HARGREAVES	NO.	DATE	REVISION	BY	APVD	

CH2MHILL

126 ARW ILLINOIS AIR NATIONAL GUARD
SCOTT AIR FORCE BASE, IL
PROJECT NUMBER VDYF989075
KC–135 FLIGHT TRAINING UNIT

ELECTRICAL/COMMUNICATION
ONE–LINE DIAGRAM
AND DETAILS

SHEET 35
DWG E–1
DATE MAY 2001
PROJ 160085.B1

FILENAME: 0085e01d.dlv PLOT DATE: 18–JUL–2001 PLOT TIME: 08:09:03

BID DOCUMENTS

REUSE OF DOCUMENTS: THIS DOCUMENT, AND THE IDEAS AND DESIGNS INCORPORATED HEREIN, AS AN INSTRUMENT OF PROFESSIONAL SERVICE, IS THE PROPERTY OF CH2M HILL AND IS NOT TO BE USED, IN WHOLE OR IN PART, FOR ANY OTHER PROJECT WITHOUT THE WRITTEN AUTHORIZATION OF CH2MHILL.
©CH2M HILL

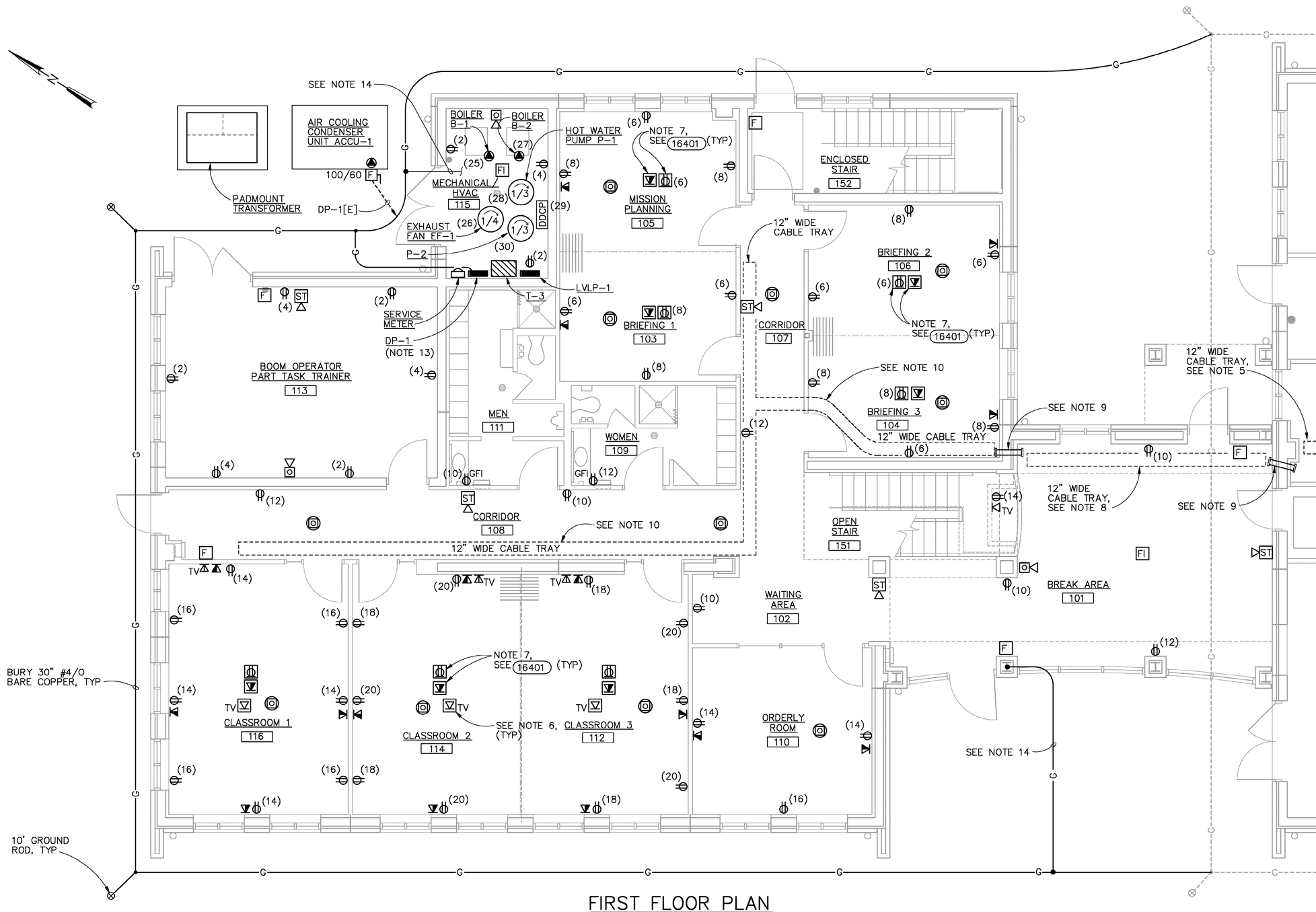

FIRST FLOOR PLAN

1/4"=1'-0"

NOTES:

1. ALL RECEPTACLE CIRCUITS IN THIS FACILITY SHALL BE FED FROM LVLP-1 UNLESS OTHERWISE NOTED ON PLAN.
2. RECEPTACLE CIRCUITS SHALL CONSIST OF A MINIMUM SIZE 10 AWG CONDUCTORS WITH A SIZE 10 AWG GROUNDING CONDUCTOR IN A MINIMUM 3/4-INCH CONDUIT AS REQD.
3. ALL CIRCUITS SHOWN WITH A NUMBER IN PARENTHESIS "(3)" DENOTES THE CIRCUIT NUMBER ASSIGNMENT WITHIN PANELBOARD LVLP-1, UNLESS NOTED OTHERWISE.
4. ROUTE NEW 12-INCH CABLE TRAY WITHIN THE PLENUM SPACE ABOVE REFLECTED CEILING. COORDINATE ROUTING WITH HVAC DUCTS AND OTHER MECHANICAL PIPING SYSTEMS.
5. FIELD VERIFY ROUTING TO FLIGHT SIMULATOR BUILDING COMM ROOM. INTERCEPT EXISTING CABLE TRAY FOR ROUTING NEW CABLES TO FINAL DROP LOCATIONS.
6. COORDINATE ACTUAL LOCATIONS OF CEILING MOUNTED CATV/CCTV OUTLETS WITH COTR/CM FOR OVERHEAD PROJECTOR EQUIPMENT PLACEMENTS.
7. FLUSH MOUNTED POWER/COMM RECEPTACLES IN FLOOR. EMBED POWER AND COMM RACEWAYS IN FLOOR SLAB AND STUB UP WITHIN NEAREST WALL SECTION. EXTEND COMM RACEWAY TO CABLE TRAY AS REQUIRED.
8. INSTALL CABLE TRAY IN CEILING SOFFIT SPACE, 1'-6" ABOVE BOTTOM FRAMING MEMBERS. CABLE TRAY SHALL BE SUPPORT BY SOFFIT FRAMING TO CONCEAL VIEW BELOW.
9. CORE DRILL (2) 6-INCH DIAMETER OPENINGS, SIDE BY SIDE VERTICALLY. REMOVE REMAINING MATERIAL BETWEEN CIRCULAR OPENINGS AND INSTALL (2) 5-INCH PVC CONDUIT SLEEVES. SEAL AROUND SLEEVES USING NON-SHRINK GROUT. PROVIDE CABLE INSULATING BUSHINGS AT EACH END.
10. INSTALL CABLE TRAY SYSTEM ABOVE CEILING TILE SYSTEM. COORDINATE ROUTING WITH HVAC DUCTS AND BLDG STRUCTURAL AND MECH PIPING AS REQD. INSTALL DATA, VOICE AND CATV/CCTV CABLES ONLY WITHIN CABLE TRAY VIA CONDUIT RUNS FROM INDIVIDUAL OUTLET LOCATIONS. THIS LAYOUT REPRESENTS A PROPOSED ROUTING. CONTRACTOR SHALL FIELD VERIFY ACTUAL ROUTING AND VERTICAL OFFSETS.
11. FOR ADDITIONAL HVAC/MECH 120-VOLT BRANCH CIRCUIT POWER/CONTROL EQUIPMENT AND INTERLOCKING REQMTS, SEE CONTROL DIAGRAMS ON DRAWING E-5.
12. FOR ADDITIONAL COMMUNICATION, TELEPHONE, INTERCOM AND FIRE ALARM SYSTEM REQUIREMENTS, SEE DRAWING E-7.
13. MOUNT TVSS ADJACENT TO DP-1 ABOVE SERVICE METER ENCLOSURE.
14. BOND GROUNDING JUMPER TO BUILDING STRUCTURAL STEEL AND MECHANICAL PIPING, INCLUDING DOMESTIC WATER, NATURAL GAS AND OTHER PIPE SYSTEMS, AS PER NEC 250-104.

©CH2M HILL

THIS DOCUMENT, AND THE IDEAS AND DESIGNS INCORPORATED HEREIN, AS AN INSTRUMENT OF PROFESSIONAL SERVICE, IS THE PROPERTY OF CH2M HILL AND IS NOT TO BE USED, IN WHOLE OR IN PART, FOR ANY OTHER PROJECT WITHOUT THE WRITTEN AUTHORIZATION OF CH2MHILL.

REUSE OF DOCUMENTS:

BID DOCUMENTS

DSGN B.M.WILLIAMS						VERIFY SCALE
DR M.A.REICHERT						BAR IS ONE INCH ON ORIGINAL DRAWING. 0 1"
CHK R.E.NAGEL						IF NOT ONE INCH ON THIS SHEET, ADJUST SCALES ACCORDINGLY.
APVD K.K.HARGREAVES	NO.	DATE	REVISION	BY	APVD	

CH2MHILL

126 ARW ILLINOIS AIR NATIONAL GUARD
SCOTT AIR FORCE BASE, IL
PROJECT NUMBER VDYF989075
KC-135 FLIGHT TRAINING UNIT

ELECTRICAL/COMMUNICATION

FIRST FLOOR POWER, COMMUNICATION AND FIRE ALARM PLAN

SHEET	36
DWG	E-2
DATE	MAY 2001
PROJ	160085.B1

FILENAME: 0085e02d.dlv PLOT DATE: 18-JUL-2001 PLOT TIME: 08:09:10

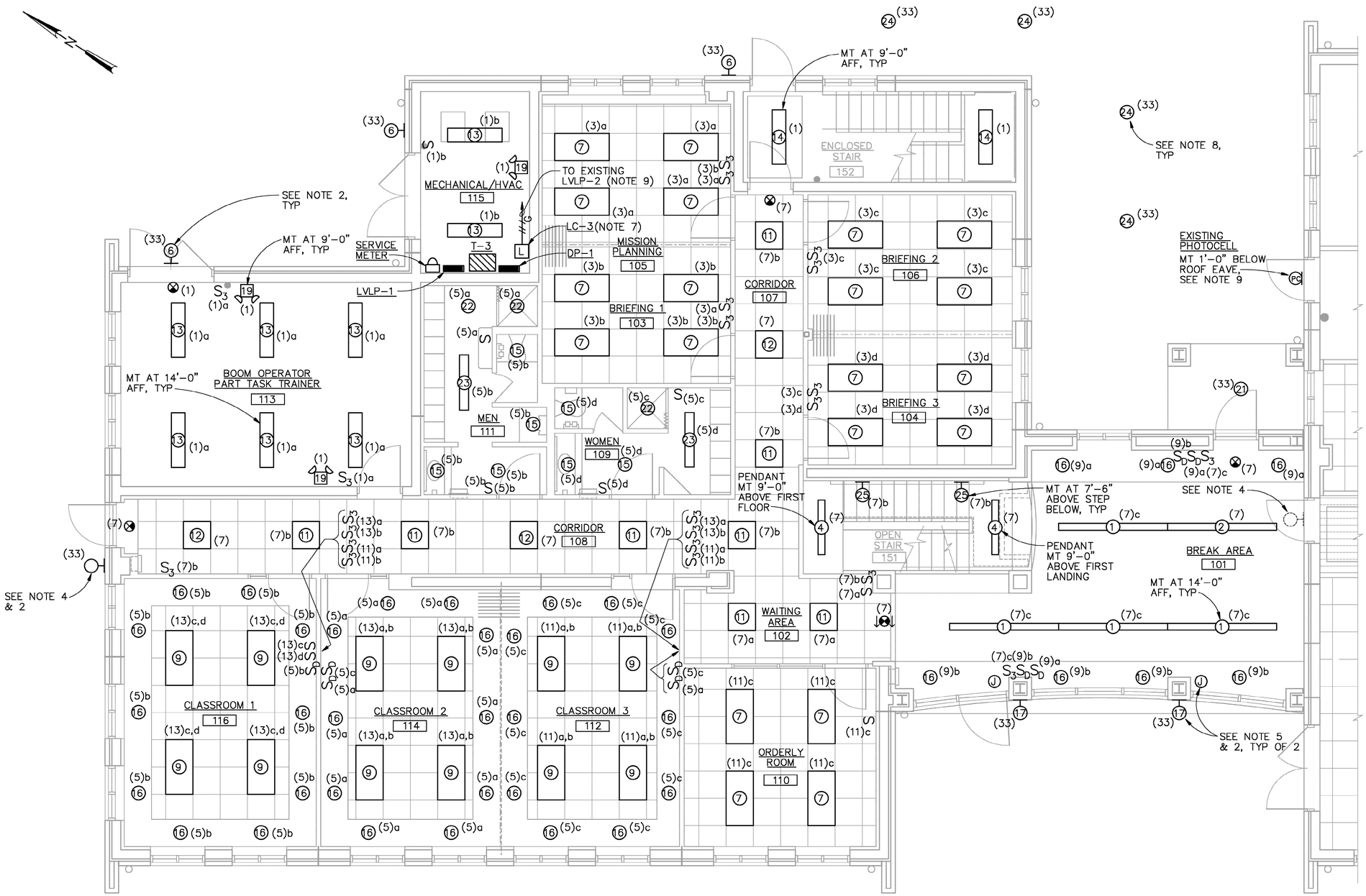

FIRST FLOOR LIGHTING PLAN

1/4"=1'-0"

NOTES:

1. ALL LIGHTING CIRCUITS SHALL BE FED FROM PANELBOARD LVLP-1 LOCATED IN MECHANICAL ROOM. EACH CIRCUIT IS DENOTED BY PANELBOARD POLE NUMBER WITHIN PARENTHESIS FOLLOWED BY A LOWER CASE LETTER WHICH DENOTES ITS SWITCHLEG. CIRCUIT DESIGNATIONS WITHOUT A SWITCHLEG IDENTIFICATION SHALL BE WIRED UNSWITCHED.
2. SEE ARCHITECTURAL PLANS AND ELEVATION DRAWINGS FOR ACTUAL LUMINAIRE MOUNTING ELEVATIONS AND LOCATIONS, UNLESS NOTED OTHERWISE ON PLANS.
3. CEILING MOUNT EXIT LIGHTS IN INTERIOR CORRIDORS AS REQUIRED, UNLESS OTHERWISE NOTED ON PLANS.
4. DISCONNECT AND REMOVE EXISTING EXTERIOR WALL MOUNTED LUMINAIRE AND REINSTALL AT NEW NORTH ENTRANCE AS INDICATED ON PLAN AND PER NOTES 2 & 6.
5. INSTALL REMOTE BALLAST WITHIN AN ACCESSIBLE RECESSED BOX SIZED AS REQUIRED TO MEET MFR HEAT LOSS REQUIREMENTS. BOX(ES) SHALL BE PROVIDED WITH A COVER PLATE AND SHALL BE LOCATED WITHIN INTERIOR SOFFIT. BALLAST SHALL BE PROVIDED WITH SUFFICIENT WIRE LENGTH TO CONNECT AT LUMINAIRE(S).
6. LIGHTING CIRCUITS SHALL CONSIST OF MINIMUM SIZE NO. 12 AWG CONDUCTORS WITH A NO. 12 AWG GREEN GROUNDING CONDUCTOR IN A MINIMUM 3/4-INCH CONDUIT AS REQUIRED PER NE CODE AND INDICATED ON PLAN.
7. FOR PHOTOCELL CONTROL OF EXTERIOR BLDG AND WALKWAY LIGHTING, SEE DRAWING E-5.
8. SEE CIVIL LANSCAPE PLAN, DRAWING C-2, FOR COORDINATION OF ACTUAL LOCATION AND INSTALLATION REQUIREMENTS.
9. RELOCATE EXISTING FLIGHT SIMULATOR PHOTOCELL AND RECONNECT TO EXISTING EXTERIOR LIGHTING CONTROL CIRCUIT. CONNECT FTU EXTERIOR LIGHTING CONTACTOR (LC-3) COIL IN PARALLEL WITH EXISTING LIGHTING CONTACTORS (LC-1 & LC-2) COILS AS SHOWN ON DWG E-5. PROVIDE FORIEGN VOLTAGE SOURCE WARNING LABEL IN LC-3.

©CH2M HILL

REUSE OF DOCUMENTS: THIS DOCUMENT, AND THE IDEAS AND DESIGNS INCORPORATED HEREIN, AS AN INSTRUMENT OF PROFESSIONAL SERVICE, IS THE PROPERTY OF CH2M HILL AND IS NOT TO BE USED, IN WHOLE OR IN PART, FOR ANY OTHER PROJECT WITHOUT THE WRITTEN AUTHORIZATION OF CH2MHILL.

BID DOCUMENTS

DSGN B.M.WILLIAMS						VERIFY SCALE
DR M.A.REICHERT						BAR IS ONE INCH ON ORIGINAL DRAWING. 0 1"
CHK R.E.NAGEL						IF NOT ONE INCH ON THIS SHEET, ADJUST SCALES ACCORDINGLY.
APVD K.K.HARGREAVES	NO.	DATE	REVISION	BY	APVD	

CH2MHILL

126 ARW ILLINOIS AIR NATIONAL GUARD
SCOTT AIR FORCE BASE, IL
PROJECT NUMBER VDYF989075
KC-135 FLIGHT TRAINING UNIT

ELECTRICAL/COMMUNICATION

FIRST FLOOR LIGHTING PLAN

SHEET 37
DWG E-3
DATE MAY 2001
PROJ 160085.B1

FILENAME: 0085e03d.dlv PLOT DATE: 18-JUL-2001 PLOT TIME: 08:09:17

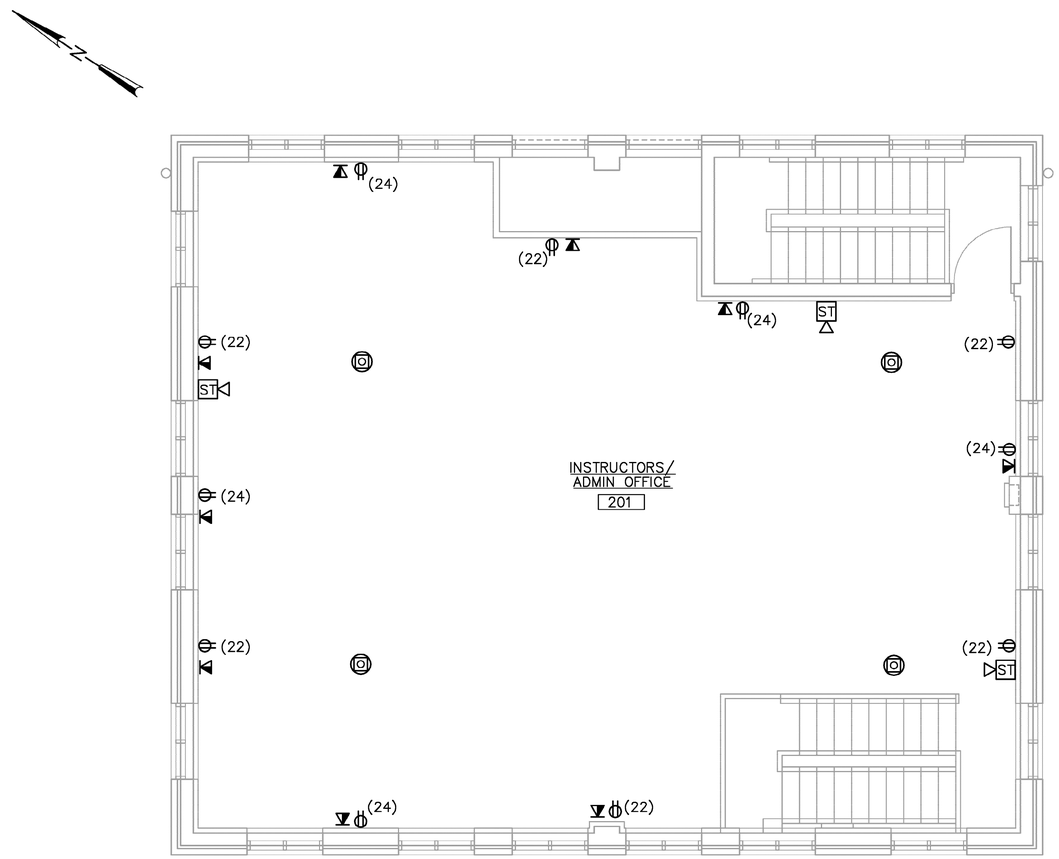

SECOND FLOOR POWER AND COMMUNICATION PLAN

1/4"=1'-0"

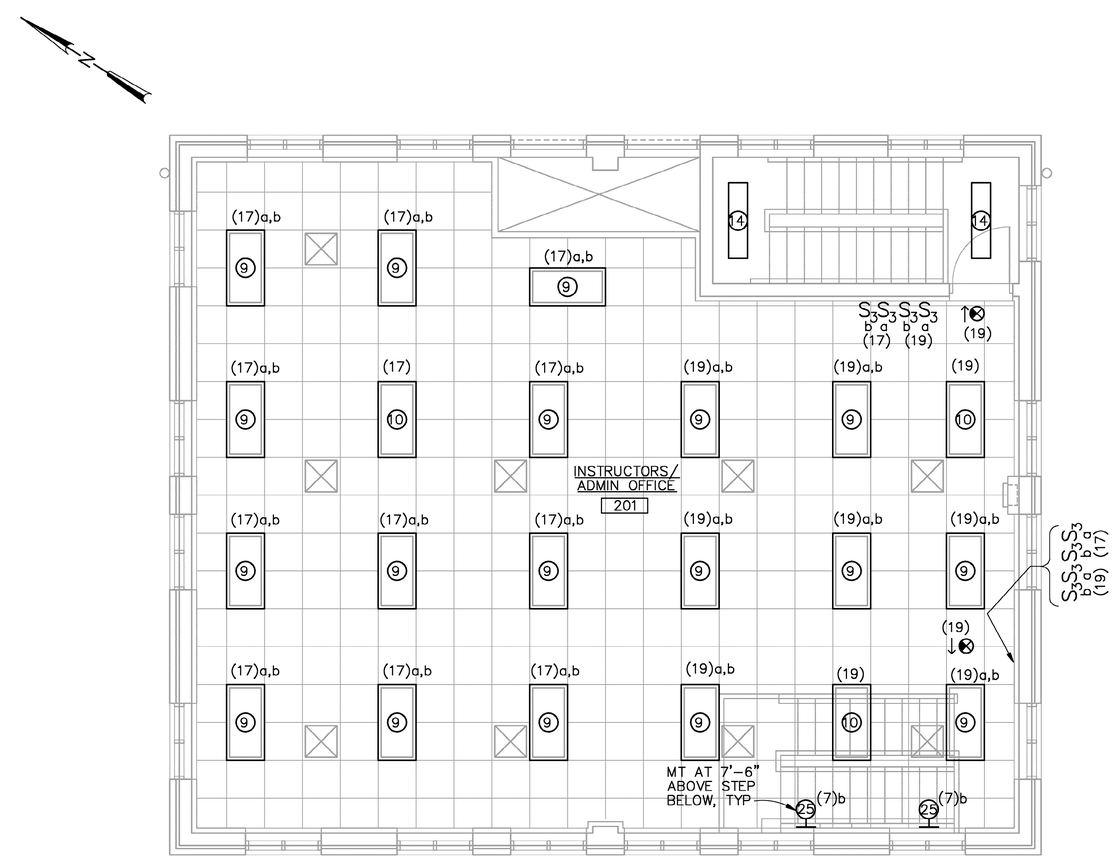

SECOND FLOOR LIGHTING PLAN

1/4"=1'-0"

NOTES:

1. ALL LIGHTING AND RECEPTACLE CIRCUITS SHALL BE FED FROM PANELBOARD LVLP-1 LOCATED IN MECHANICAL HVAC ROOM. EACH CIRCUIT IS DENOTED BY PANELBOARD POLE NUMBER WITHIN PARENTHESIS FOLLOWED BY A LOWER CASE LETTER WHICH DENOTES ITS SWITCHLEG. CIRCUIT DESIGNATIONS WITHOUT A SWITCHLEG IDENTIFICATION SHALL BE WIRED UNSWITCHED.
2. RECEPTACLE CIRCUITS SHALL CONSIST OF A MINIMUM SIZE 12 AWG CONDUCTORS WITH A SIZE 12 AWG GROUNDING CONDUCTOR IN A MINIMUM 3/4-INCH CONDUIT AS REQD.
3. CEILING MOUNT EXIT LIGHTS IN AS REQUIRED, UNLESS OTHERWISE NOTED ON PLANS.
4. LIGHTING CIRCUITS SHALL CONSIST OF MINIMUM SIZE NO. 12 AWG CONDUCTORS WITH A NO. 12 AWG GREEN GROUNDING CONDUCTOR IN A MINIMUM 3/4-INCH CONDUIT AS REQUIRED PER NE CODE AND AS INDICATED ON PLAN.

DSGN B.M.WILLIAMS						VERIFY SCALE
DR M.A.REICHERT						BAR IS ONE INCH ON ORIGINAL DRAWING. 0 1"
CHK R.E.NAGEL						IF NOT ONE INCH ON THIS SHEET, ADJUST SCALES ACCORDINGLY.
APVD K.K.HARGREAVES	NO.	DATE	REVISION	BY	APVD	

CH2MHILL

126 ARW ILLINOIS AIR NATIONAL GUARD
SCOTT AIR FORCE BASE, IL
PROJECT NUMBER VDYF989075
KC-135 FLIGHT TRAINING UNIT

ELECTRICAL/COMMUNICATION
SECOND FLOOR
POWER, COMMUNICATION AND
LIGHTING PLANS

SHEET	38
DWG	E-4
DATE	MAY 2001
PROJ	160085.B1

FILENAME: 0085e04d.dlv PLOT DATE: 18-JUL-2001 PLOT TIME: 08:09:23

BID DOCUMENTS

REUSE OF DOCUMENTS: THIS DOCUMENT, AND THE IDEAS AND DESIGNS INCORPORATED HEREIN, AS AN INSTRUMENT OF PROFESSIONAL SERVICE, IS THE PROPERTY OF CH2M HILL AND IS NOT TO BE USED, IN WHOLE OR IN PART, FOR ANY OTHER PROJECT WITHOUT THE WRITTEN AUTHORIZATION OF CH2MHILL.
©CH2M HILL

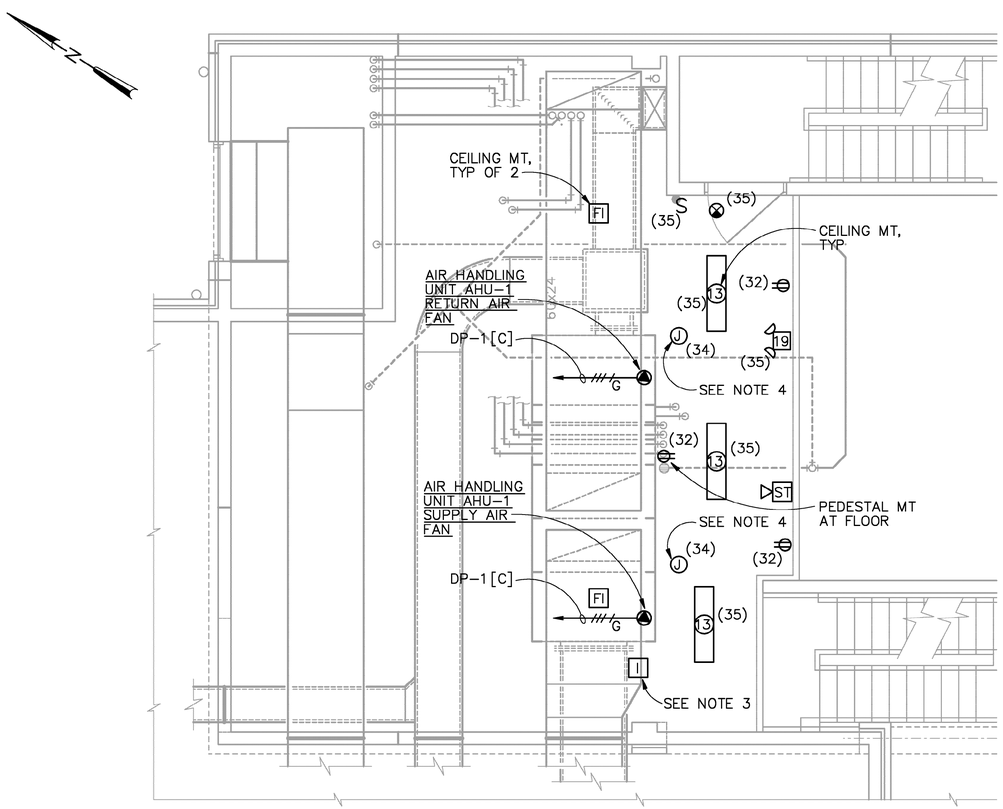

HVAC MEZZANINE PLAN

1/4"=1'-0"

NOTES:

1. LIGHTING AND RECEPTACLE CIRCUITS ARE FED FROM PANELBOARD LVLP-1 LOCATED IN MECH/HVAC ROOM UNLESS OTHERWISE NOTED.
2. ELECTRICAL CONTRACTOR SHALL COORDINATE ACTUAL HVAC EQUIPMENT LOCATIONS AS PER APPROVED HVAC SUBMITTALS.
3. DUCT SMOKE DETECTOR SHALL BE CONFIGURED TO PROVIDE A SIGNAL TO SHUTDOWN AIR HANDLING EQUIPMENT VIA DDCP WITH A SEPARATE SIGNAL TO FIRE ALARM SYSTEM, AS REQUIRED.
4. PROVIDE CEILING MOUNTED OUTLET BOX AND COVER TO SUPPLY POWER TO OVER HEAD POWER CORD AND REEL NIC. COIL 3 FEET OF CONDUCTORS WITHIN J-BOX.

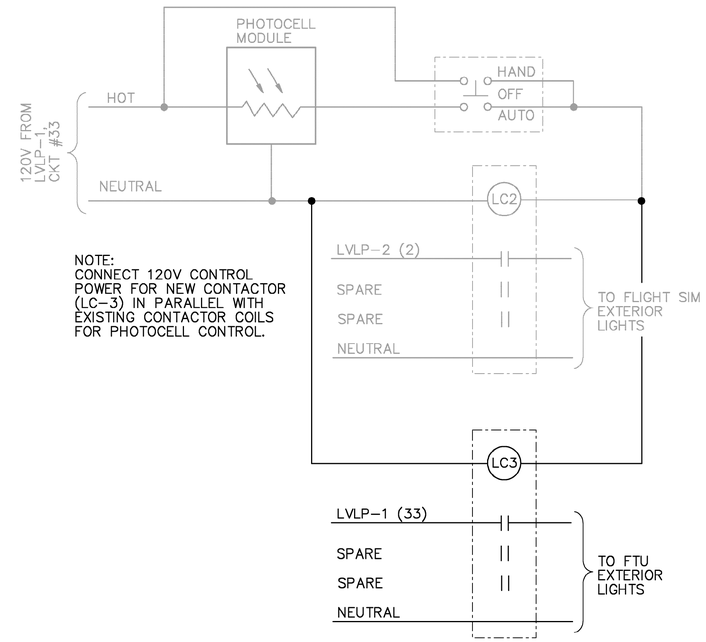

NOTE:
CONNECT 120V CONTROL POWER FOR NEW CONTACTOR (LC-3) IN PARALLEL WITH EXISTING CONTACTOR COILS FOR PHOTOCELL CONTROL.

EXTERIOR LIGHTING CONTROL SCHEMATIC

NTS

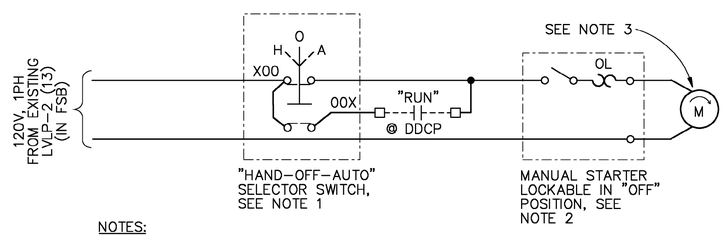

NOTES:

1. MOUNT SELECTOR SWITCH ON WALL ADJACENT TO EQUIPMENT.
2. MOUNT ON OR ADJACENT TO EQUIPMENT, AS REQUIRED.
3. HOT WATER PUMP P-3 IS LOCATED WITHIN FLIGHT SIMULATOR BLDG JANITOR ROOM. SEE MECH PLANS FOR ACTUAL LOCATION.

HOT WATER PUMP (P-3)

NTS

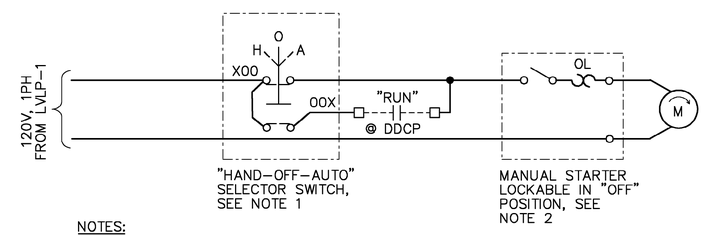

NOTES:

1. MOUNT SELECTOR SWITCH ON WALL ADJACENT TO EQUIPMENT BEING CONTROLLED.
2. MOUNT ON OR ADJACENT TO EQUIPMENT AS REQUIRED.

HOT WATER PUMP (P-1 & P-2)
EXHAUST FAN (EF-1)
BOILER (B-1 & B-2)

NTS

DSGN B.M.WILLIAMS						VERIFY SCALE
DR M.A.REICHERT						BAR IS ONE INCH ON ORIGINAL DRAWING. 0 1"
CHK R.E.NAGEL						IF NOT ONE INCH ON THIS SHEET, ADJUST SCALES ACCORDINGLY.
APVD K.K.HARGREAVES	NO.	DATE	REVISION	BY	APVD	

CH2MHILL

126 ARW ILLINOIS AIR NATIONAL GUARD
SCOTT AIR FORCE BASE, IL
PROJECT NUMBER VDYF989075
KC-135 FLIGHT TRAINING UNIT

ELECTRICAL/COMMUNICATION

HVAC MEZZANINE PLAN AND DETAILS

SHEET 39
DWG E-5
DATE MAY 2001
PROJ 160085.B1

FILENAME: 0085e05d.dlv PLOT DATE: 18-JUL-2001 PLOT TIME: 08:09:29

BID DOCUMENTS

REUSE OF DOCUMENTS: THIS DOCUMENT, AND THE IDEAS AND DESIGNS INCORPORATED HEREIN, AS AN INSTRUMENT OF PROFESSIONAL SERVICE, IS THE PROPERTY OF CH2M HILL AND IS NOT TO BE USED, IN WHOLE OR IN PART, FOR ANY OTHER PROJECT WITHOUT THE WRITTEN AUTHORIZATION OF CH2MHILL.
©CH2M HILL

LUMINAIRE SCHEDULE

SYMBOL	TYPE	VOLTAGE	DESCRIPTION	MANUFACTURER	CATALOG NO.	LAMPS	MOUNTING
1	FLUOR	120V	6-INCH ROUND ALUMINUM CHANNEL HOUSING, TAMDEM 8-FT, 60 DEGREES APERTURE TOP, AND 120 DEGREES BOTTOM, WITH REFLECTOR AND LINEAR PRISMATIC UPPER LEN AND ALUMINUM BAFFLE LOWER SHIELDING AND FINISHES AS PER OWNER APPROVAL, INCLUDING STEM WITH CANOPY TO MATCH BODY FINSH, UL-LISTED HPF RAPID START BALLAST.	PEERLESS	LD6-412753-BXX-8 -1-F-XXX-MSC	(2) 32W DOWN (1) 32W UP	PENDANT
2	FLUOR	120V	SIMILAR TO TYPE 1, EXCEPT INCLUDES SELF CONTAINED EMERGENCY POWER PACK FOR DOWN LAMPS ONLY.	PEERLESS	LD6-412753-BXX-8 -1-F-XXX-MSC EMU	(2) 32W DOWN (1) 32W UP	PENDANT
3	FLUOR	120V	SIMILAR TO TYPE 1, EXCEPT 4-FT, 1-LAMP UP, 1-LAMP DOWN.	PEERLESS	LD6-211504-BXX-4 -1-F-XXX-MSC	(1) 32W DOWN (1) 32W UP	PENDANT
4	FLUOR	120V	SIMILAR TO TYPE 3, EXCEPT INCLUDES SELF CONTAINED EMERGENCY POWER PACK FOR BOTH LAMPS	PEERLESS	LD6-211504-BXX-4 -1-F-XXX-MSC EMU	(1) 32W DOWN (1) 32W UP	PENDANT
5	FLUOR	120V	SIMILAR TO TYPE 1, EXCEPT (1) UP AND (1) DOWN LAMP	PEERLESS	LD6-211504-BXX-8 -1-F-XXX-MSC	(1) 32W DOWN (1) 32W UP	PENDANT
6	HID	120V	DIE-CAST ALUMINUM HOUSING, BRONZE FINISH, MOLDED PRISMATIC THERMAL SHOCK RESISTANT, BOROSILICATE GLASS REFRACTOR AND INTEGRAL HID BALLAST. WALL MOUNT OVER RECESSED OUTLET BOX. SUITABLE FOR WET LOCATIONS. INTEGRAL PHOTOCELL CONTROL AND FUSING.	HOLOPHANE WALLPACKETTE	WP2A-070MH-12-BZ-P-F1	70W CLEAR-MH	SURFACE
7	FLUOR	120V	2' x 4' STATIC TROFFER WITH PARABOLIC SHAPED LOUVER, SILVER FINISH, POSITIVE LATCHING, 3" DEEP, 2-9 CELL, DOUBLE DOORS, 2 LAMP WITH HIGH FREQUENCY, HPF ELECTRONIC RAPID START BALLAST.	DAY-BRITE BENJAMIN	PARALOUVER III BPGS224-P9F22	(2) F32T8 CW RAPID START	RECESSED
8	FLUOR	120V	SIMILAR TO TYPE 7, EXCEPT INCLUDES SELF CONTAINED EMERGENCY POWER PACK (DEB-7)	DAY-BRITE	PARALOUVER III EBPGS224-P9F22	(2) F32T8 CW RAPID START	RECESSED
9	FLUOR	120V	2' x 4' STATIC TROFFER WITH PARABOLIC SHAPED LOUVER, SILVER FINISH, POSITIVE LATCHING, 3" DEEP, 2-9 CELL, DOUBLE DOORS, 3 LAMP WITH HIGH FREQUENCY, HPF ELECTRONIC RAPID START BALLAST.	DAY-BRITE	PARALOUVER III BPGS324-P9F22	(3) F32T8 CW RAPID START	RECESSED
10	FLUOR	120V	SIMILAR TO TYPE 9, EXCEPT INCLUDES SELF CONTAINED EMERGENCY POWER PACK (DEB-7) EMERGENCY BALLAST ON CENTER LAMP ONLY.	DAY-BRITE	PARALOUVER III EBPGS324-P9F22	(3) F32T8 CW RAPID START	RECESSED
11	FLUOR	120V	2' x 2' STATIC TROFFER WITH PARABOLIC SHAPED LOUVER, SILVER FINISH, POSITIVE LATCHING, 3" DEEP, 9 CELL, 2 LAMP WITH HIGH FREQUENCY, HPF ELECTRONIC RAPID START BALLAST.	DAY-BRITE	PARALOUVER III PGS222-P9F22	(2) F32/U/3 T8 RAPID START	RECESSED
12	FLUOR	120V	SIMILAR TO TYPE 11, EXCEPT INCLUDES SELF CONTAINED EMERGENCY POWER PACK (DEB-7)	DAY-BRITE	PARALOUVER III EPGS222-P9F22	(2) F32/U/3 T8 RAPID START	RECESSED
13	FLUOR	120V	1' x 4' INDUSTRIAL RLM. PROCELAIN ENAMEL STEEL REFLECTOR SLOTTED FOR 10% UP-LIGHT, STEEL CHANNEL, WHITE ENAMEL FINISH. ENERGY SAVING BALLAST, 430ma.	DAYBRITE	FL-1024-4U-120V	(2) F32T8 RS, CW/SS 430ma	SURFACE or PENDANT
14	FLUOR	120V	SIMULAR TO TYPE "13," EXCEPT INCLUDES SELF-CONTAINED EMERGENCY POWER PACK. (DEB-7)	DAYBRITE	EFL-1024-4U-120V	(2) F32T8 RS, CW/SS 430ma	SURFACE or PENDANT
15	INCAND	120V	5" DOWNLIGHT, SPECULAR ALZAK, OPEN APERTURE REFLECTOR FINSH, WITH A STEEL FRAME-IN MODULE AND FLANGED TO ACCOMMODATE DRYWALL OR CEILING TILE GALVANIZED STEEL JUNCTION BOX WITH SNAP ON COVER, MEDIUM BASE PORCELAIN SOCKET AND THERMALLY PROTECTED PER NEC 410-65C AND UL 1571.	LITHONIA	J01A-LPJ-LMH	(1) 100W A19	RECESSED
16	INCAND	120V	5" EYEBALL FINISHING TRIM WITH MATTE BLACK BAFFLE 350 DEGREE ROTATION, WITH A STEEL FRAME-IN MODULE AND FLANGED TO ACCOMMODATE DRYWALL OR CEILING TILE GALVANIZED STEEL JUNCTION BOX WITH SNAP ON COVER, MEDIUM BASE PORCELAIN SOCKET AND THERMALLY PROTECTED PER NEC 410-65C AND UL 1571.	LITHONIA	JE1SB-LPJ-LMH	(1) 75W R20	RECESSED
17	HID	120V	14" DIA HID DECORATIVE WALL BRACKETWHITE ACRYLIC SPHERE, HALF ROUND CAST GUARD, COPPER FREE DIE-CAST ALUMINUM HOUSING AND GUARD, BRONZE FINISH. REMOTE HPF BALLAST, GASKETED REFACTOR SUITABLE FOR WET LOCATIONS.	ARCHITECTURAL AREA LIGHTING	ALB 14WHG 70MH WMA9	(1) 70W-MH	SURFACE
18	FLUOR	120V	SIMULAR TO FIXTURE TYPE 13, EXCEPT INCLUDE MOUNTING BRACKETS FOR WALL MOUNTING	DAYBRITE	FL-1024-4U-120V	(2) F32T8 RS, CW/SS 430ma	SURFACE or PENDANT
19	~	120V	EMERGENCY BATTERY UNIT, 5"W x 14"W x 5"D, COMPLETELY SELF-CONTAINED TEST-SWITCH, CHARGE RATE INDICATOR, BATTERY CHARGER, PURE LEAD, 15 YEAR MAINTENANCE FREE BATTERY, TWO 7.2 WATT SEALED BEAM LAMP HEADS, UNIVERSAL MOUNTING, MINIMUM 90-MIN OPERATION.	DUAL-LITE	EZ-2 SERIES	LAMPS FURNISHED WITH UNIT	WALL MOUNTED
20	INCAND	120V	EXIT LIGHT, SELF CONTAINED EMERGENCY BATTERY UNIT, POWER PACK WITH INTEGRAL PURE LEAD BATTERY, MAINTENANCE FREE, 90-MIN, 9"H x 10-1/2"W, DIE-CAST ALUMINUM HOUSING WITH WHITE FINISH, RED STENCIL LETTERS, DOWNLIGHT, CHARGE RATE, PILOT LIGHT AND TEST SWITCH, UNIVERSAL MOUNTING, ARROWS AS INDICATED ON PLANS.	DUAL-LITE	EXCALUBUR CWRWW-WEP	(2) 15W	WALL MOUNTED or PENDANT
21	HID	120V	13-INCH CIRCULAR RECESSED OUTDOOR CANOPY FIXTURE LISTED FOR WET LOCATIONS. CONSTRUCTED OF ELECTRO-GALVANIZED STEEL MOUNTING PAN SUPPORTS REFLECTOR DOOR FRAME AND BALLAST, WITH ALUMINUM HYDROFORMED REFLECTOR ALZAK FINISH AND DIE-CAST DOOR FRAME WITH 3/8-INCH THICK BOROSCILICATE PRIMATIC GLASS LENS, SUITABLE FOR WET/CORROSIVE ENVIRONMENTS.	GUTH SEELUX	B11562/120/TP/ISL	(1) 150W MH ED-17 LAMP	CEILING MOUNT RECESSED
22	FLUOR	120V	6-INCH ROUND POLYCARBONATE DIFFUSER, STEEL HOUSING WITH INTEGRAL PLASTER FLANGE, PRE WIRED WITH JUNCTION BOX AND HPF BALLAST AND DROP DIFFUSER OPTION	LITHONIA DOWN LIGHTING	RL 1S-HPF LQ 13QT 120	13W-F13DTT/27K	CEILING MOUNT RECESSED
23	FLUOR	120V	1'x4' LOW PROFILE WRAPAROUND, WIDE BODY 20-GAUGE CHANNEL AND END PLATES, 24-GAUGE CHANNEL COVER, 100% VIRGIN ACRYLIC DIFFUSER WITH THERMALLY PROTECTED, HPF RAPID ELECTRONIC BALLAST.	LITHONIA	2LB-232-A-120-ES	(2) F032T8 RAPID START	SURFACE MOUNT
24	HID	120V	BOLLARD, 70W MH VANDAL RESISTANT CAST ALUMINUM LOUVERED HOUSING, ALUMINUM SHAFT, DUAL FUNCTION LUMINAIRE, DARK BRONZE POWDER COAT FINISH	KIM	VRB2C/70MH120/BL-P	(1) 70 MH (ED-17)	PEDESTAL MOUNT
25	INCAND	120V	WALL SCONCE, PLAID PATTERN ADA DIJKSTRA LAMPEN DESIGN, SURFACE MOUNTED, FROSTED WHITE ENCLOSURE, UL-LISTED AND CERTIFIED FOR DRY, DAMP AND WET LOCATIONS, WITH (2) 60 WATT, T-10 TYPE MEDIUM BASE SOCKET AND LAMPS	D'AC LIGHTING	D1213-2N60-120-SS-MB	(2) 60 WATT	SURFACE MOUNT

DP-1

VOLTAGE: 480/277 VOLTS
3 PHASE, 4 WIRE
MOUNTING: SURFACE
INTERRUPTING RATING - 25,000 AMPS, RMS, SYMMETRICAL

ENCLOSURE: NEMA 1
225 AMP BUS
NEUTRAL - NONE
TYPE: 200 AMP MAIN BREAKER
SERVICE ENTRANCE RATED
LOCATION: MECHANICAL ROOM

DESCRIPTION	LOAD AMPS	BKR SIZE	BKR POLES	CKT NO.	THREE PHASE	CKT NO.	BKR POLES	BKR SIZE	LOAD AMPS	DESCRIPTION
LVLP-3 (VIA XFMR T-3)	36.0	60	3	1	A	2	3	60	44.0	ACCU-1 (20 TON)
LVLP-3 (VIA XFMR T-3)	36.0			3	B	4			44.0	ACCU-1 (20 TON)
LVLP-3 (VIA XFMR T-3)	36.0			5	C	6			44.0	ACCU-1 (20 TON)
AHU-1 (SUPPLY FAN-VFD)	14.0	20	3	7	A	8	3	15	7.6	AHU-1 (RETURN FAN-VFD)
AHU-1 (SUPPLY FAN-VFD)	14.0			9	B	10			7.6	AHU-1 (RETURN FAN-VFD)
AHU-1 (SUPPLY FAN-VFD)	14.0			11	C	12			7.6	AHU-1 (RETURN FAN-VFD)
SPARE	2.0	30	3	13	A	14	3	30	0.0	TVSS
SPARE	2.0			15	B	16			0.0	TVSS
SPARE	2.0			17	C	18			0.0	TVSS
SPARE	2.0	15	3	19	A	20	3	20	2.0	SPARE
SPARE	2.0			21	B	22			2.0	SPARE
SPARE	2.0			23	C	24			2.0	SPARE
SPACE ONLY				25	A	26				SPACE ONLY
SPACE ONLY				27	B	28				SPACE ONLY
SPACE ONLY				29	C	30				SPACE ONLY
SPACE ONLY				31	A	32				SPACE ONLY
SPACE ONLY				33	B	34				SPACE ONLY
SPACE ONLY				35	C	36				SPACE ONLY
				37	A	38				
				39	B	40				
				41	C	42				

109.6 LOADS - PHASE A
109.6 LOADS - PHASE B
109.6 LOADS - PHASE C
109.6 AVERAGE CONNECTED AMPS
91.1 TOTAL LOADS: CONNECTED KVA

LVLP-1

VOLTAGE: 208/120 VOLTS
3 PHASE, 4 WIRE
MOUNTING: SURFACE
INTERRUPTING RATING - 10,000 AMPS, RMS, SYMMETRICAL

ENCLOSURE: NEMA 1
MAIN: 100 AMP
NEUTRAL - FULL
TYPE: 100 AMP MAIN BREAKER
LOCATION: MECHANICAL ROOM

DESCRIPTION	LOAD AMPS	BKR SIZE	BKR POLES	CKT NO.	THREE PHASE	CKT NO.	BKR SIZE	BKR POLES	LOAD AMPS	DESCRIPTION
LTS-BOOM OPER/MECH RMS & STAIRS	10.0	20	1	1	A	2	20	1	7.5	RECEPTACLES- BOOM OPER & MECH RMS
LTS-BRIEFING 1,2&3 & MISSION RMS	13.3	20	1	3	B	4	20	1	6.0	RECEPTACLES- BOOM OPER & MECH RMS
LTS-MENS & WOMENS BATH RMS	8.1	20	1	5	C	6	20	1	9.0	RECEPTACLES- BRIEF 1,2&3 & MISSION RMS
LTS-CORRIDORS & BREAK RM	15.8	20	1	7	A	8	20	1	9.0	RECEPTACLES- BRIEF 1,2&3 & MISSION RMS
LTS-CLASSRM NO.1 & BREAK RM	10.6	20	1	9	B	10	20	1	7.5	RECEPTACLES- MENS/CORR/BREAK RMS
LTS-CLASSRM NO.3 & ORDERLY RM	7.3	20	1	11	C	12	20	1	6.0	RECEPTACLES- WOMEN/CORR/BREAK RMS
LTS-CLASSRM NO. 1 & 2	8.0	20	1	13	A	14	20	1	9.0	RECEPTACLES- CLASSRM 1 & ORDERLY RM
LTS-CLASSRM NO.1 & 2	7.0	20	1	15	B	16	20	1	7.5	RECEPTACLES- CLASSRM 1/WAIT/ORDERLY
LTS-INSTRUCTORS & ADMIN OFFICE	12.0	20	1	17	C	18	20	1	7.5	RECEPTACLES- CLASSRMS 2 & 3
LTS-INSTRUCTORS & ADMIN OFFICE	9.0	20	1	19	A	20	20	1	7.5	RECEPTACLES- CLASSRMS 2 & 4
HVAC VAV BOXES*	8.0	20	1	21	B	22	20	1	9.0	RECEPTACLES- INSTRUC/ADMIN OFFICE
HVAC VAV BOXES*	8.0	20	1	23	C	24	20	1	7.5	RECEPTACLES- INSTRUC/ADMIN OFFICE
BOILER NO.1	2.0	20	1	25	A	26	20	1	5.8	EXHAUST FAN EF-1
BOILER NO.2	2.0	20	1	27	B	28	20	1	7.2	HOT WATER PUMP P-1
HVAC PANEL DDCP-1	6.0	20	1	29	C	30	20	1	7.2	HOT WATER PUMP P-2
LIGHTING CONTACTOR LC-1	2.0	20	1	31	A	32	20	1	4.5	RECEPTACLES- HVAC MEZZANINE
LTS-EXTERIOR BLDG & WALKWAY	8.3	20	1	33	B	34	20	1	3.0	OVERHEAD POWER DROP CORD
LTS-HVAC MEZZANINE	2.5	20	1	35	C	36	20	1	2.0	SPARE
SPARE	2.0	20	1	37	A	38	20	1	2.0	SPARE
SPARE	2.0	20	1	39	B	40	20	1	2.0	SPARE
SPACE				41	C	42				SPACE

* 208V, SINGLE PHASE CIRCUIT RESERVED FOR HVAC CONTROLS CONTRACTOR TO FEED VAV BOXES. EACH VAV UNIT SHALL BE INSTALLED WITH A MANUAL STARTER SWITCH FOR SERVICE ISOLATION.

94.1 Loads - Phase A
93.4 Loads - Phase B
83.1 Loads - Phase C
89.9 Average Connected Amps
32.4 Total Loads: Connected KVA

THIS DOCUMENT, AND THE IDEAS AND DESIGNS INCORPORATED HEREIN, AS AN INSTRUMENT OF PROFESSIONAL SERVICE, IS THE PROPERTY OF CH2M HILL AND IS NOT TO BE USED, IN WHOLE OR IN PART, FOR ANY OTHER PROJECT WITHOUT THE WRITTEN AUTHORIZATION OF CH2MHILL. ©CH2M HILL

REUSE OF DOCUMENTS:

BID DOCUMENTS

DSGN B.M.WILLIAMS					
DR M.A.REICHERT					
CHK R.E.NAGEL					
APVD K.K.HARGREAVES	NO.	DATE	REVISION	BY	APVD

VERIFY SCALE
BAR IS ONE INCH ON ORIGINAL DRAWING.
0 1"
IF NOT ONE INCH ON THIS SHEET, ADJUST SCALES ACCORDINGLY.

CH2MHILL

126 ARW ILLINOIS AIR NATIONAL GUARD
SCOTT AIR FORCE BASE, IL
PROJECT NUMBER VDYF989075
KC-135 FLIGHT TRAINING UNIT

ELECTRICAL/COMMUNICATION

SCHEDULES

SHEET 40
DWG E-6
DATE MAY 2001
PROJ 160085.B1

FILENAME: 0085e06d.dlv PLOT DATE: 18-JUL-2001 PLOT TIME: 08:09:35

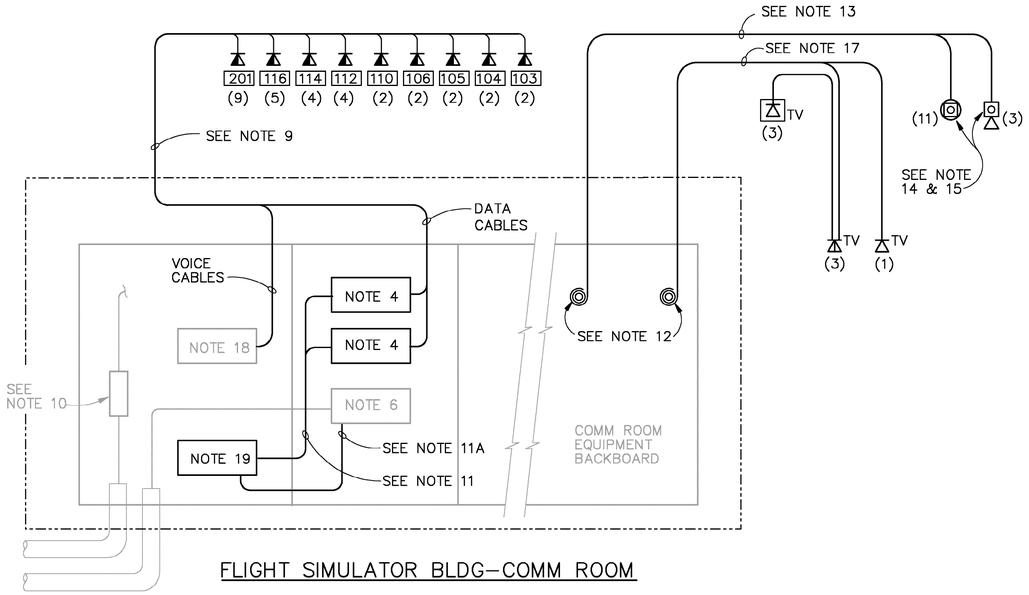

FLIGHT SIMULATOR BLDG–COMM ROOM

DATA/TELEPHONE, INTERCOM & CATV/CCTV RISER DIAGRAM

NTS

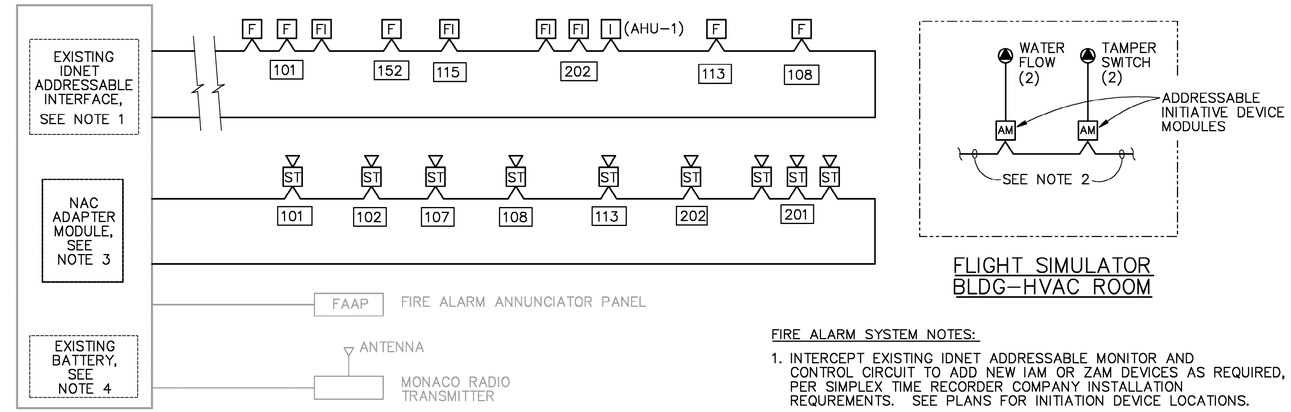

EXISTING FIRE ALARM CONTROL PANEL(FACP)

FLIGHT SIMULATOR BLDG–HVAC ROOM

FIRE ALARM RISER DIAGRAM

NTS

FIRE ALARM SYSTEM NOTES:

1. INTERCEPT EXISTING IDNET ADDRESSABLE MONITOR AND CONTROL CIRCUIT TO ADD NEW IAM OR ZAM DEVICES AS REQUIRED, PER SIMPLEX TIME RECORDER COMPANY INSTALLATION REQUREMENTS. SEE PLANS FOR INITIATION DEVICE LOCATIONS.
2. CONNECT NEW WET AND DRY SPRINKLER SYSTEM TAMPER AND FLOW SWITCHES INTO EXISTING PRACTION PANEL LOCATED IN THE MECH ROOM OF THE FLIGHT SIMULATOR BLDG. PROVIDE SIGNAL INTERLOCK WITH EXISTING FACP FOR THESE INITIATION DEVICES AS REQUIRED PER REQUIREMENTS BY SIMPLEX.
3. PROVIDE A NEW 2–POINT, CLASS A NAC ADAPTER AND INSTALL IN EXISTING FACP FOR NEW FTU NOTIFICATION APPLIANCE DEVICES, LOOP CONNECTION.
4. PROVIDE A FIRE ALARM SYSTEM LOAD EVALUATION OF NEW AND EXISTING APPLIANCES AND MODULES FOR SUFFICIENT BATTERY AMP–HOUR CAPACITY. PROVIDE ADDITIONAL BATTERY CAPACITY OR REPLACE EXISTING AS REQUIRED FOR PROPER MONITORING AND ALARM OPERATIONS DURING POWER LOSS, PER SIMPLEX RECOMMENDATION.

BILL OF MATERIAL

ITEM NO.	ITEM DESCRIPTION/MFR PART NO.
1	PANDUIT CHS2 ANGLED, SLOPED MODULE INSERT.
2	PANDUIT CBE–2G EXECUTIVE SERIES FACEPLATE.
3	2 – BLANK INSERTS (WHITE) PANDUIT CMBE1–X
4	2 – 8 PIN, CAT 5E, PANDUIT CJ 588 BWH, RJ–45 (WHITE) (T–568B), ANGLED INSERT
5	2 – 8 PIN CAT 5E RJ–45 PANDUIT 588B BL, (T–568B), BLUE FOR AIR NATIONAL GUARD LAN – ANGLED INSERT
6	2 – 8 PIN CAT 5E RJ–45 PANDUIT CJ 588B OR, (T–568B), ORANGE FOR FLIGHT SAFETY LAN – ANGLED INSERT
7	1 – MODULE SPACE, SINGLE GANG FACEPLATE, PANDUIT MODEL; CFP1E1
8	2 – MODULE SPACE, SINGLE GANG FACEPLATE, PANDUIT MODEL; CFP2E1
9	1 – F–TYPE BULKHEAD COUPLER MODULE, PANDUIT MODEL; CMFBA

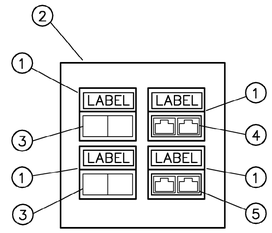

TYPICAL VOICE/DATA OUTLET

NTS

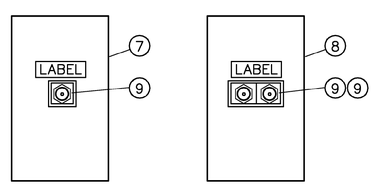

SINGLE DUPLEX

TYPICAL CATV/CCTV OUTLETS

NTS

NOTES:

1. 100 PAIR CONNECTOR BLOCKS WITH 100 GAS PROTECTION MODULES. LUCENT TECHNOLOGIES NO. 489ACA1–100.
2. 100 PAIR 110 CAT. 5E PUNCHDOWN BLOCKS. PANDUIT NO. P110KB1004.
3. MOUNTING AREA FOR HUBS, ETC.
4. 48 PORT MODULAR PATCH PANEL – PANDUIT NO. CPP48WBL WITH CAT 5E CONNECTORS PANDUIT NO. CJ588BBL. MOUNT ONE ON PANDUIT NO. WBH4 RACK WITH WIRE MANAGER WMPF1.
5. 12 PORT FIBER ENCLOSURE PANDUIT NO. FWME12BL POPULATED WITH SC CONNECTORS – PANDUIT NO. FAP3WDSC FOR SINGLE MODE FIBER.
6. 24 PORT FIBER ENCLOSURE PANDUIT NO. FWME24STBL FOR MULTI–MODE FIBER.
7. GROUND BAR TO BUILDING SERVICE GROUND. INSTALL 3/4" PVC CONDUIT WITH 1 #1/0 AWG BARE COPPER TO EACH GROUND BAR.
8. VOICE/DATA OUTLETS – TWO BLUE RJ–45 DATA (SCOTT AFB LAN), TWO WHITE RJ–45 VOICE AND TWO WHITE BLANK. USE ANGLED INSERTS AND IVORY EXECUTIVE SERIES PLATE.
9. FOUR, CAT 5E, 4–PAIR CABLES TO EACH VOICE/DATA OUTLET. COLOR OF CABLES TO BE GRAY FOR VOICE, BLUE FOR ANG LAN. INSTALL CABLES IN CABLETRAY, EXITING WITH 1" CONDUIT FROM TRAY TO OUTLET, BELDEN 1585A.
10. SPLICE CASE FOR 100 PAIR INCOMING CABLE.
11. PROVIDE CAT 5E PATCH CORDS FOR EACH POSITION.

11A. PROVIDE TYPE ST MULTIMODE PATCH CORDS FOR EACH POSITION.

12. COIL 10 FEET OF SLACK FOR CONNECTION BY OTHERS.
13. SINGLE PAIR SPEAKER WIRE WITH BRAIDED SHIELD, PVC JACKET.
14. CEILING SPEAKERS, SOUNDELIER MODEL FD72A, CEILING BAFFLE AND MOUNTIN RAILS, OR EQUAL.
15. HORN TYPE SPEAKERS, SOUNDELIER DOUBLE–ENTRANT, MODEL AP15T, OR EQUAL.
16. J–F1 – JUNCTION BOX FOR FUTURE FLIGHT SERVICES SMOKE AND TEMPERATURE SENSORS.
17. RG59/U CABLE TO PANDUIT CMFBA CONNECTOR AND FACEPLATE PANDUIT CFPE1E1. WALL OR CEILING MOUNT OUTLET WHERE INDICATED.
18. 300 PAIR 110 CAT 5E PUNCHDOWN BLOCKS.PANDUIT NO. P110KB3004.
19. PROVIDE (2) 10/100 BASE T HUBS FOR INCOMING MULTIMODE FIBER AND 24 PORTS EACH.

NOTES ABOVE ARE BASE ON FLIGHT SIMULATOR TRAINING BUILDING PROPOSED CONTRACT DRAWING. ALL COMM COMPONENTS AND ASSOCIATED DEVICES AND MODULAR EQUIPMENT TO BE INTERFACED WITH OR PROVIDED UNDER THIS CONTRACT SHALL BE FIELD VERIFIED PER EXISTING INSTALLATION AND MFRS SUPPLIED. COORDINATE AND SUBMIT PROPOSED MODIFICATIONS PER COTR/CM APPROVAL.

DSGN B.M.WILLIAMS						
DR M.A.REICHERT						
CHK R.E.NAGEL						
APVD K.K.HARGREAVES	NO.	DATE	REVISION	BY	APVD	

VERIFY SCALE
BAR IS ONE INCH ON ORIGINAL DRAWING.
0 1"
IF NOT ONE INCH ON THIS SHEET, ADJUST SCALES ACCORDINGLY.

CH2MHILL

126 ARW ILLINOIS AIR NATIONAL GUARD
SCOTT AIR FORCE BASE, IL
PROJECT NUMBER VDYF989075
KC–135 FLIGHT TRAINING UNIT

ELECTRICAL/COMMUNICATION

RISER DIAGRAMS

SHEET 41
DWG E–7
DATE MAY 2001
PROJ 160085.B1

FILENAME: 0085e07d.dlv PLOT DATE: 18–JUL–2001 PLOT TIME: 10:46:27

BID DOCUMENTS

REUSE OF DOCUMENTS: THIS DOCUMENT, AND THE IDEAS AND DESIGNS INCORPORATED HEREIN, AS AN INSTRUMENT OF PROFESSIONAL SERVICE, IS THE PROPERTY OF CH2M HILL AND IS NOT TO BE USED, IN WHOLE OR IN PART, FOR ANY OTHER PROJECT WITHOUT THE WRITTEN AUTHORIZATION OF CH2MHILL.
©CH2M HILL

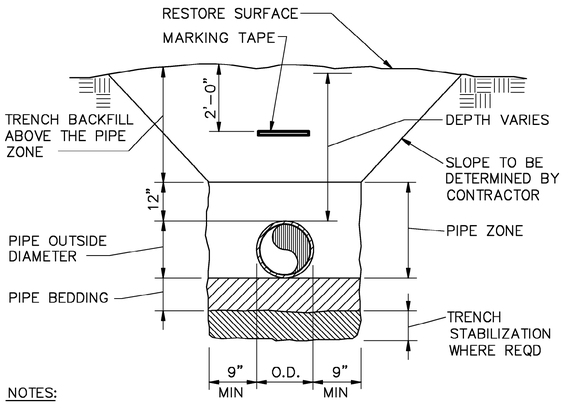

NOTES:

1. O.D. EQUALS OUTSIDE DIAMETER OF PIPE, CONDUIT, CABLE, OR DUCT BANK. WITH MULTIPLE PIPES, CONDUITS, CABLES, OR DUCT BANKS IN SINGLE TRENCH, OD EQUALS AGGREGATE WIDTH PLUS SPACE BETWEEN.
2. MINIMUM TRENCH WIDTH FOR OUTSIDE DIAMETER < 4-INCHES IS 18-INCHES, INCLUSIVE OF PIPE DIAMETER.

TRENCH DETAIL

NTS

2310

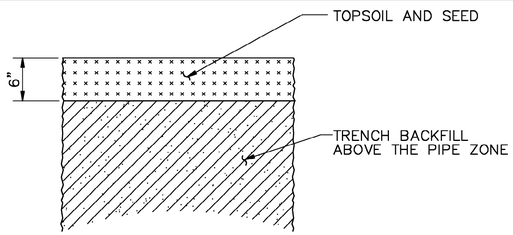

GRASS SURFACE

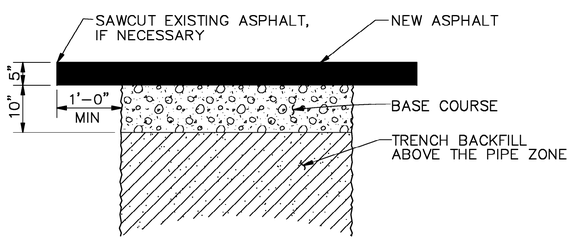

ASPHALT SURFACE

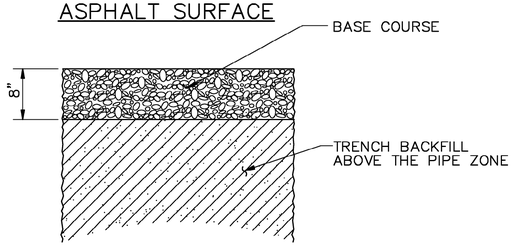

GRAVEL SURFACE

SURFACE RESTORATION DETAIL

NTS

2380

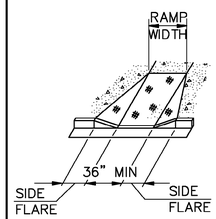

RAMP DETAIL

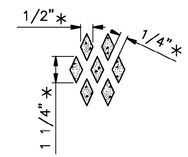

RAMP TEXTURE DETAIL

(* NOMINAL DIMENSIONS)

NOTES:

1. RAMP TEXTURING IS TO BE DONE WITH AN EXPANDED METAL GRATE PLACED AND REMOVED FROM WET CONCRETE TO LEAVE A DIAMOND PATTERN AS SHOWN. THE LONG AXIS OF THE DIAMOND PATTERN SHALL BE PERPENDICULAR TO THE CURB. GROOVES SHALL BE 3 MM (1/8") DEEP AND 6 MM (1/4") WIDE.
2. THE MAXIMUM SLOPE OF THE SIDE FLARE FOR RAMPS SHALL BE 1:10.
3. ALL SLOPE RATIOS ARE EXPRESSED AS UNITS OF VERTICAL DISPLACEMENT TO UNITS OF HORIZONTAL DISPLACEMENT (V:H).
4. ALL DIMENSIONS ARE IN MILLIMETERS (INCHES) UNLESS OTHERWISE SHOWN.

HANDICAP RAMP DETAIL

NTS

2385

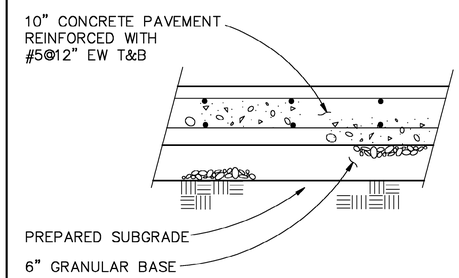

PAVEMENT DETAIL

NTS

2387

TABLE OF DIMENSIONS (INCHES) MOUNTABLE CURB						
TYPE	A	B	C	D	R_1	T
M-15.45 (M-6.18)	450 (18)	150 (6)	50 (2)	150 (6)	50 (2)	150 (6)

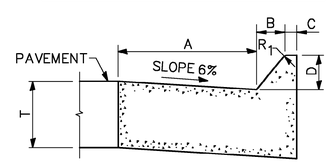

MOUNTABLE CURB

NOTE:

1. ALL DIMENSIONS ARE IN MILLIMETERS (INCHES) UNLESS OTHERWISE SHOWN.

CONCRETE CURB AND GUTTER DETAIL

NTS

2388

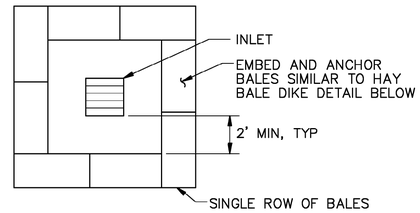

HAY BALE INLET PROTECTION

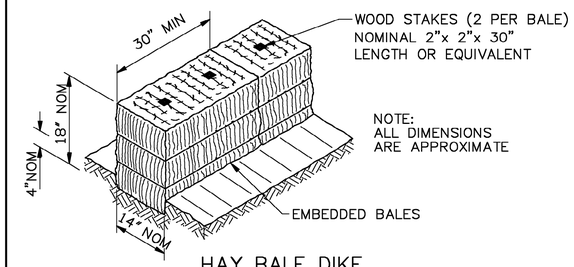

HAY BALE DIKE

SOIL EROSION AND SEDIMENTATION CONTROL

GENERAL NOTES:

1. CONSTRUCT HAY BALE INLET PROTECTION AROUND EACH EXISTING DRAINAGE INLET OR CATCH BASIN WITHIN 50 FEET [15.24m] OF EXCAVATIONS OR DEMOLITION AREAS, WHETHER SHOWN OR NOT.
2. SILT FENCE SHALL BE CONSTRUCTED AROUND ALL EXCAVATED MATERIAL STOCKPILES THAT ARE TO REMAIN FOR LONGER THAN 8 HOURS.
3. TOPSOIL, SEED, FERTILIZE, AND MULCH ALL OTHER DISTURBED AREAS IMMEDIATELY UPON COMPLETION OF CONSTRUCTION IN THOSE AREAS.
4. PROTECT ALL PAVED AREAS AROUND PROJECT SITE FROM SILTATION.
5. REMOVE EROSION CONTROL MEASURES AS CONSTRUCTION PROCEEDS AS SOON AS THE AREA AFFECTED BY THE CONTROL MEASURE IS STABILIZED.

EROSION CONTOL DETAIL

NTS

2390

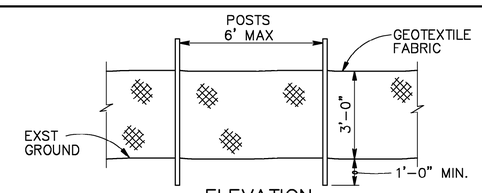

ELEVATION

NOTE:

AT THE COMPLETION OF THE PROJECT AND AFTER SOIL STABILIZATION AND VEGETATION GROWTH HAVE BEEN ASSURED, THE SILT FENCE MUST BE COMPLETELY REMOVED AND THE EMBEDMENT TRENCH RESTORED TO THE NATURAL CONDITION

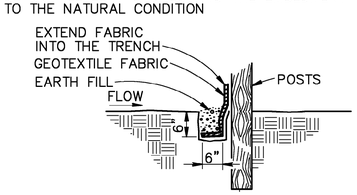

TRENCH DETAIL

TEMPORARY SILT FENCE DETAIL

NTS

2391

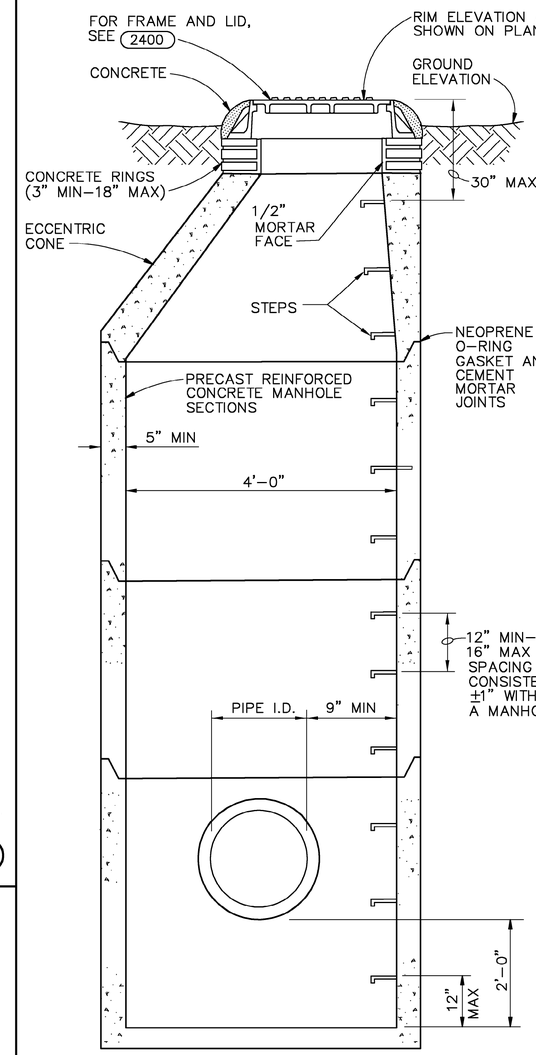

STORM SEWER INLET DETAIL

NTS

2392

DSGN S.M.BRUER						VERIFY SCALE
DR M.A.REICHERT						BAR IS ONE INCH ON ORIGINAL DRAWING. 0 1"
CHK C.G.BARNETT						IF NOT ONE INCH ON THIS SHEET, ADJUST SCALES ACCORDINGLY.
APVD K.K.HARGREAVES	NO.	DATE	REVISION	BY	APVD	

CH2MHILL

126 ARW ILLINOIS AIR NATIONAL GUARD
SCOTT AIR FORCE BASE, IL
PROJECT NUMBER VDYF989075
KC-135 FLIGHT TRAINING UNIT

STANDARD DETAILS

CIVIL

SHEET	42
DWG	D-1
DATE	MAY 2001
PROJ	160085.B1

BID DOCUMENTS

REUSE OF DOCUMENTS: THIS DOCUMENT, AND THE IDEAS AND DESIGNS INCORPORATED HEREIN, AS AN INSTRUMENT OF PROFESSIONAL SERVICE, IS THE PROPERTY OF CH2M HILL AND IS NOT TO BE USED, IN WHOLE OR IN PART, FOR ANY OTHER PROJECT WITHOUT THE WRITTEN AUTHORIZATION OF CH2MHILL. ©CH2M HILL

FILENAME: 0085d01d.dwg PLOT DATE: 18-Jul-2001 PLOT TIME: 06:53:43

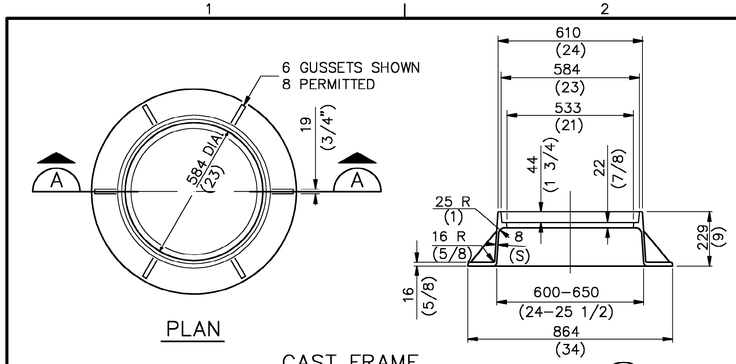

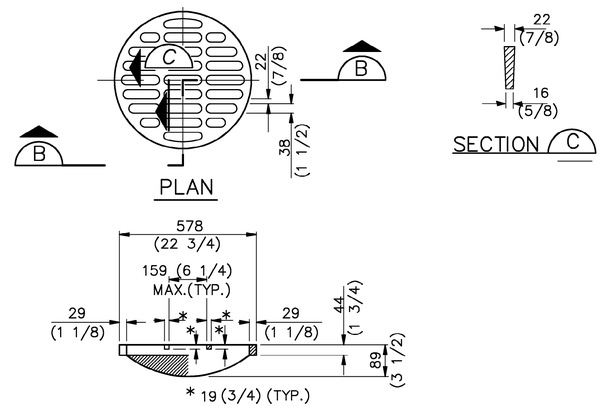

STORM SEWER INLET
CAST OPEN LID
53 KG (116 LBS)

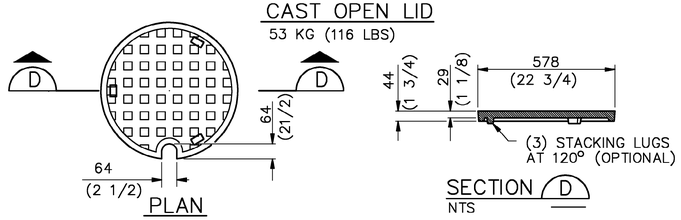

STORM SEWER MANHOLE
CAST CLOSED LID
GRAY IRON LID
(125 LBS) 56.7 KG

NOTES:
1. ALL DIMENSIONS ARE IN MILLIMETERS (INCHES) UNLESS OTHERWISE SHOWN.
2. CONFORMS TO ILLINOIS DOT STANDARD 604001.

STORM SEWER INLET AND MANHOLE FRAME AND LIDS TYPE 1 DETAIL

NTS

2400

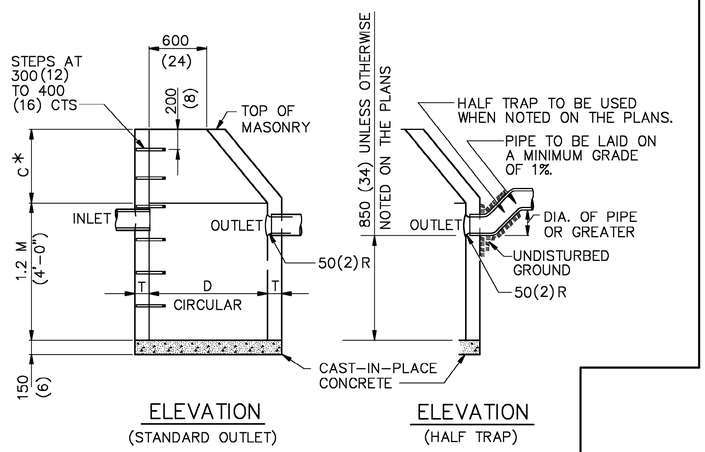

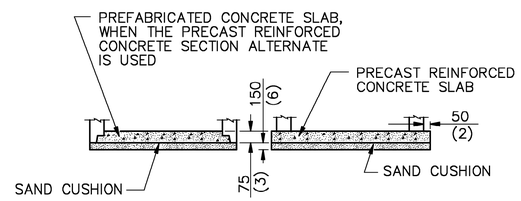

ALTERNATE BOTTOM SLAB

ALTERNATE MATERIALS FOR WALLS	D	C	T (MIN.)
CONCRETE MASONRY UNIT	1.2 M (4'–0") 1.5 M (5'–0")	750 (30) 1.15 M (3'–9")	125 (5) 125 (5)
BRICK MASONRY	1.2 M (4'–0") 1.5 M (5'–0")	750 (30) 1.15 M (3'–9")	200 (8) 200 (8)
PRECAST REINFORCED CONCRETE SECTION	1.2 M (4'–0") 1.5 M (5'–0")	750 (30) 1.15 M (3'–9")	100 (4) 125 (5)
CAST–IN–PLACE CONCRETE	1.2 M (4'–0") 1.5 M (5'–0")	750 (30) 1.15 M (3'–9")	150 (6) 150 (6)

GENERAL NOTES

1. SEE (2402) FOR FRAME AND LID.
2. ALL CATCH BASINS SHALL BE 1.2 M (4'–0") IN DIAMETER UNLESS OTHERWISE NOTED ON THE PLANS.
3. * DIMENSION C FOR PRECAST REINFORCED CONCRETE SECTION MAY VARY FROM THE DIMENSION GIVEN TO PLUS 150 mm (6").
4. SEE ILLINOIS DOT STANDARD 602601 FOR OPTIONAL PRECAST REINFORCED CONCRETE FLAT SLAB TOP.
5. ALL DIMENSIONS ARE IN MILLIMETERS (INCHES) UNLESS OTHERWISE SHOWN.
6. CONFORMS TO ILLINOIS DOT STANDARD 602001 STORM SEWER.

CATCH BASIN TYPE A DETAIL

NTS

2401

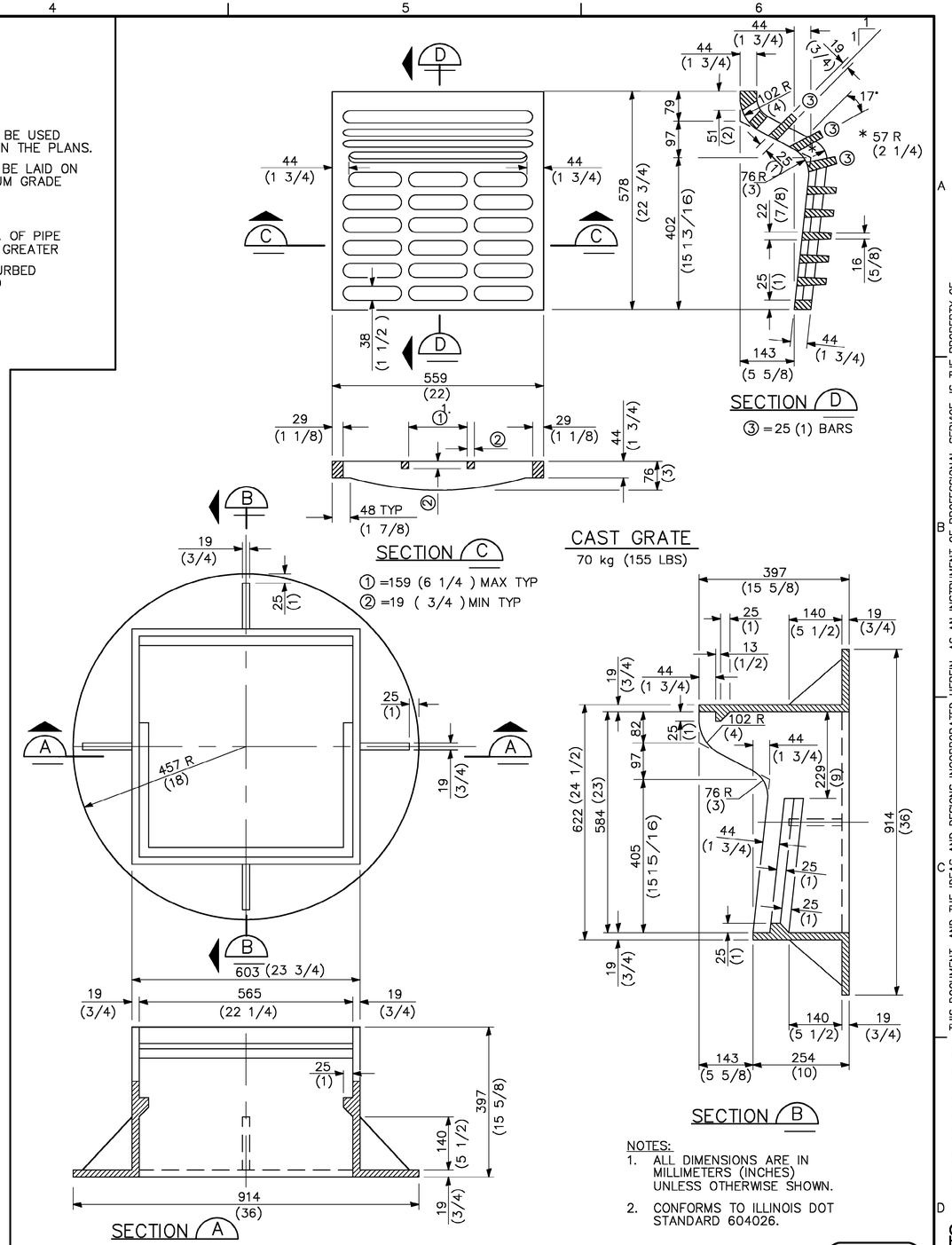

NOTES:
1. ALL DIMENSIONS ARE IN MILLIMETERS (INCHES) UNLESS OTHERWISE SHOWN.
2. CONFORMS TO ILLINOIS DOT STANDARD 604026.

FRAME AND GRATE TYPE 6 DETAIL

NTS

2402

DSGN S.M.BRUER						VERIFY SCALE
DR M.A.REICHERT						BAR IS ONE INCH ON ORIGINAL DRAWING. 0 1"
CHK C.G.BARNETT						IF NOT ONE INCH ON THIS SHEET, ADJUST SCALES ACCORDINGLY.
APVD K.K.HARGREAVES	NO.	DATE	REVISION	BY	APVD	

CH2MHILL

126 ARW ILLINOIS AIR NATIONAL GUARD
SCOTT AIR FORCE BASE, IL
PROJECT NUMBER VDYF989075
KC–135 FLIGHT TRAINING UNIT

STANDARD DETAILS

CIVIL

SHEET	43
DWG	D–2
DATE	MAY 2001
PROJ	160085.B1

FILENAME: 0085d02d.dwg PLOT DATE: 18–Jul–2001 PLOT TIME: 06:55:33

BID DOCUMENTS

REUSE OF DOCUMENTS: THIS DOCUMENT, AND THE IDEAS AND DESIGNS INCORPORATED HEREIN, AS AN INSTRUMENT OF PROFESSIONAL SERVICE, IS THE PROPERTY OF CH2M HILL AND IS NOT TO BE USED, IN WHOLE OR IN PART, FOR ANY OTHER PROJECT WITHOUT THE WRITTEN AUTHORIZATION OF CH2MHILL. ©CH2M HILL

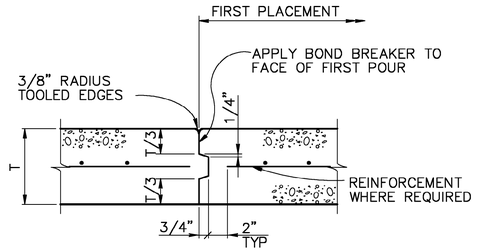

SLAB ON GRADE KEYED CONSTRUCTION JOINT DETAIL

NTS

3281

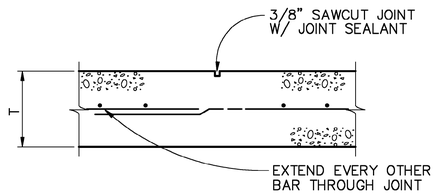

SLAB ON GRADE CONTROL JOINT DETAIL

NTS

3282

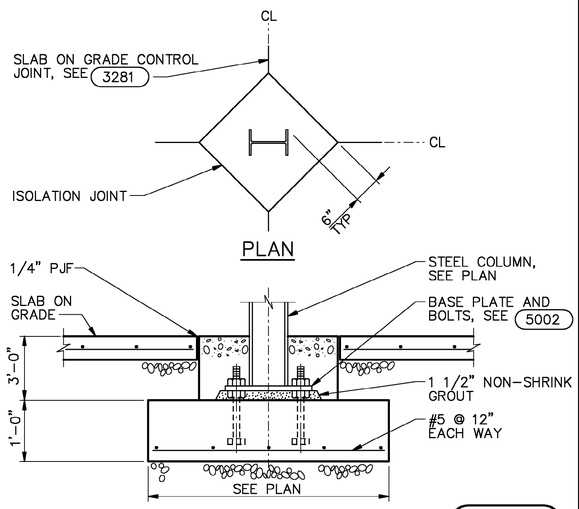

ELEVATION

3326

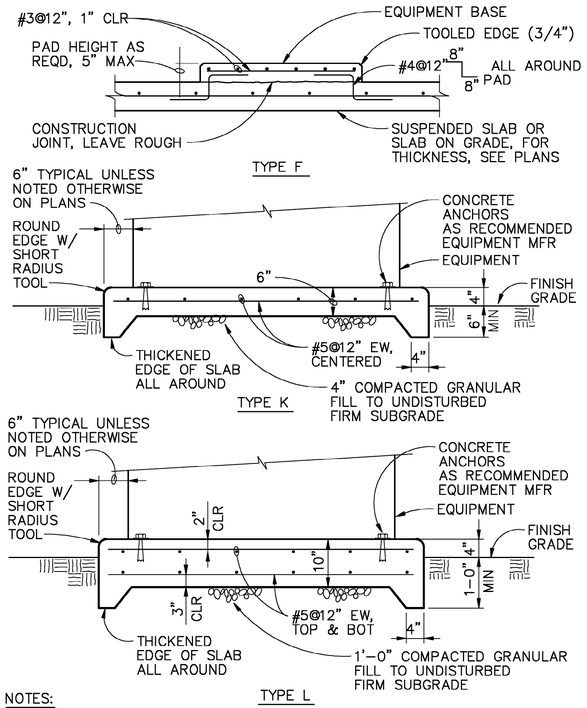

NOTES:

1. EQUIPMENT BASES SHALL BE INSTALLED LEVEL UNLESS SPECIFIED OTHERWISE.
2. PAD SIZE SHALL BE MINIMUM INDICATED OR AS SHOWN ON THE PLANS OR AS INDICATED BY MANUFACTURER AND APPROVED BY THE ENGINEER.
3. WHEN ANCHORAGE OF EQUIPMENT TO TYPE "F" EQUIPMENT PAD IS REQUIRED, USE SST WEDGE ANCHORS.
4. USE FLUID NON-SHRINK GROUT TO LEVEL AND ALIGN EQUIPMENT INSTALLED ON THE TYPE "F" EQUIPMENT PAD.

EQUIPMENT PADS DETAIL

NTS

3356

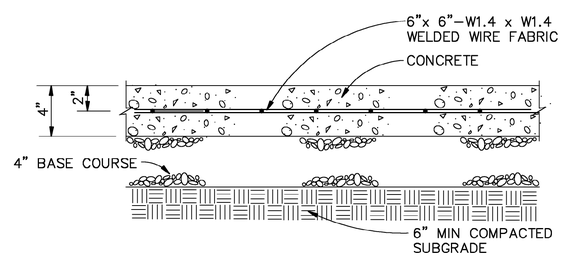

NOTE:

ALL OUTSIDE SURFACE EDGES ARE TO BE TOOLED WITH 1/4" RADIUS.

4" THICK SIDEWALK DETAIL

NTS

3390

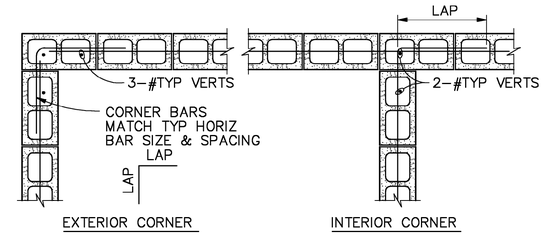

SINGLE MAT PLAN

NOTES:

1. LAP=48 BAR DIAMETERS OR 2'-0" MIN UNLESS OTHERWISE NOTED.
2. PROVIDE A STANDARD 90° HOOK EACH END ON ANY HORIZONTAL BAR BETWEEN OPENINGS OR CORNERS LESS THAN 6'-0" IN LENGTH.

CMU WALL CORNERS DETAIL

NTS

4001

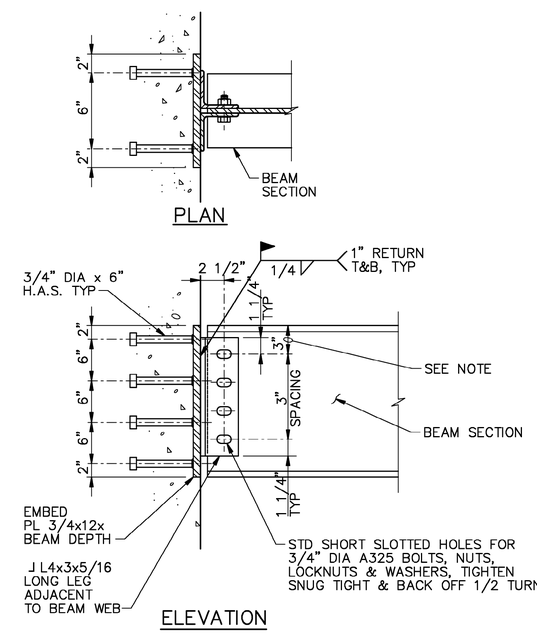

ELEVATION

NOTE:

2 1/2" FOR 8" BEAM DEPTH.

EMBEDDED CONNECTION DETAIL STEEL BEAMS

NTS

4002

CMU OPENING REINF SCHEDULE						
8" WALLS						
W	LINTEL DEPTH	STIRRUP SIZE, SPA	"A" BARS	"B" BARS	"C" BARS	JAMB WIDTH
≤2'-8"	8"	–	1	1	1	8"
>2'-8"≤4'-0"	16"	–	2	1	1	8"
>4'-0"≤6'-0"	24"	#3@8"	2	1	2	16"
>6'-0"≤8'-0"	32"	#3@16"	2	2	3	24"
>8'-0"≤11'-0"	48"	#3@24"	2	2	3	24"
12" WALLS						
W	LINTEL DEPTH	STIRRUP SIZE, SPA	"A" BARS	"B" BARS	"C" BARS	JAMB WIDTH
≤2'-8"	8"	–	2	2	2	8"
>2'-8"≤4'-0"	16"	–	2	2	2	8"
>4'-0"≤6'-0"	24"	#3@8"	2	2	4	16"
>6'-0"≤8'-0"	32"	#3@16"	2	2	6	24"
>8'-0"≤10'-0"	48"	#3@24"	2	2	6	24"

NOTES:

1. USE BAR QUANTITIES AND SIZES GIVEN IN LINTEL SCHED UNLESS OTHERWISE NOTED ON THE DRAWINGS.
2. EXTEND "C" BARS 48 BAR DIA OR 2'-0" MIN BEYOND TOP AND BOTTOM OF OPENING EXCEPT THAT WHEN "H" OR "W" EXCEEDS 2'-0", "C" BARS SHALL EXTEND FULL HEIGHT.
3. "A" AND "B" BARS SHALL EXTEND 48 BAR DIA OR 2'-0" MIN EACH SIDE OF THE OPENINGS.
4. FOR BAR SIZES, MATCH TYP WALL REINF AS SHOWN ON THE BUILDING WALL SECTIONS.

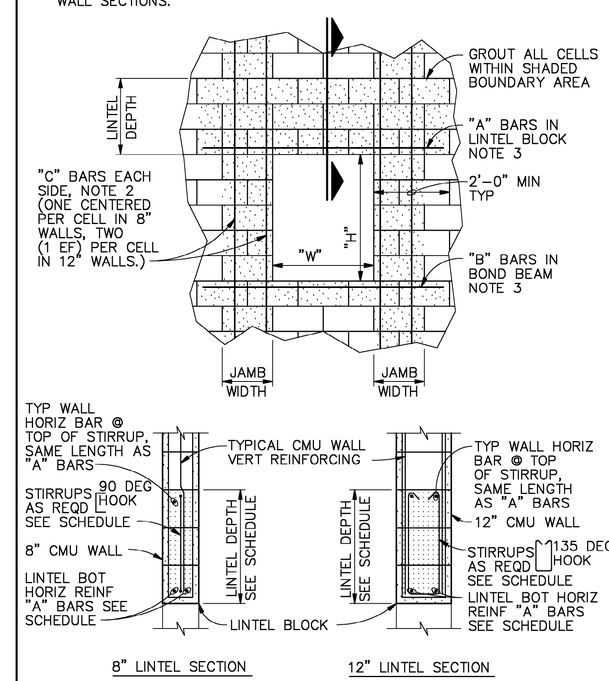

CMU OPENING REINFORCING DETAIL

NTS

4003

REUSE OF DOCUMENTS: THIS DOCUMENT, AND THE IDEAS AND DESIGNS INCORPORATED HEREIN, AS AN INSTRUMENT OF PROFESSIONAL SERVICE, IS THE PROPERTY OF CH2M HILL AND IS NOT TO BE USED, IN WHOLE OR IN PART, FOR ANY OTHER PROJECT WITHOUT THE WRITTEN AUTHORIZATION OF CH2MHILL.
©CH2M HILL

BID DOCUMENTS

DSGN D.R.LANGE					
DR M.A.REICHERT					
CHK R.A.GERMAINE					
APVD K.K.HARGREAVES	NO.	DATE	REVISION	BY	APVD

VERIFY SCALE
BAR IS ONE INCH ON ORIGINAL DRAWING.
0 1"
IF NOT ONE INCH ON THIS SHEET, ADJUST SCALES ACCORDINGLY.

CH2MHILL

126 ARW ILLINOIS AIR NATIONAL GUARD
SCOTT AIR FORCE BASE, IL
PROJECT NUMBER VDYF989075
KC-135 FLIGHT TRAINING UNIT

STANDARD DETAILS

STRUCTURAL

SHEET	44
DWG	D-3
DATE	MAY 2001
PROJ	160085.B1

FILENAME: 0085d03d.dlv PLOT DATE: 24-MAY-2001 PLOT TIME: 14:06:40

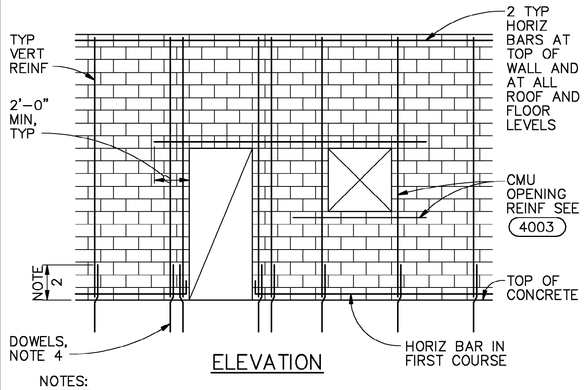

NOTES:

1. FOR TYPICAL WALL REINFORCING, SEE DRAWING G–4, GENERAL STRUCTURAL NOTES.
2. LAP ALL REINFORCING 48 BAR DIAMETERS (2'–0" MIN), EXCEPT LAP VERTICAL BARS IN MIDDLE HALF OF WALL HEIGHT 72 BAR DIAMETERS.
3. STAGGER SPLICES IN ADJACENT HORIZONTAL BARS IN THE SAME COURSE BY 2'–0".
4. PROVIDE DOWEL BARS IN FOUNDATION TO MATCH ALL VERTICAL REINFORCING.
5. FOR ADDED REINFORCING AT WALL INTERSECTIONS AND CORNERS, SEE (4001).
6. GROUT EACH SIDE OF OPENING AS NOTED IN TYPICAL OPENING REINFORCING DETAIL (4003).

REINFORCED CMU WALL DETAIL

NTS

(4004)

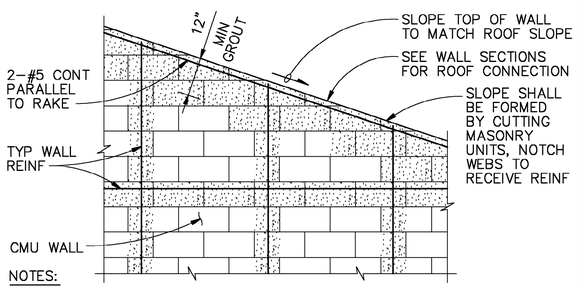

NOTES:

SOLID GROUT MINIMUM 12" AT TOP OF WALL.

CMU WALL AT RAKE DETAIL

NTS

(4041)

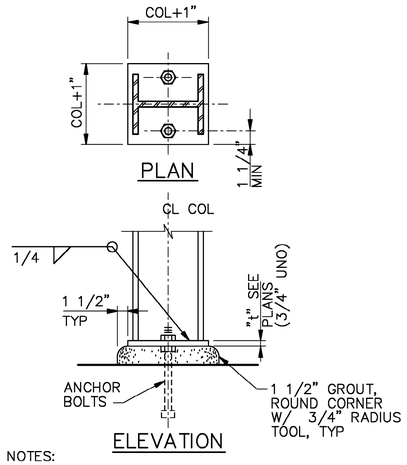

NOTES:

1. ANCHOR BOLTS SHALL BE 3/4" DIA x 1'–0" WITH LEVELING NUTS UNLESS OTHERWISE SHOWN.
2. GROUT SHALL BE NONSHRINK AS PER SPECIFICATIONS, FLOWABLE.

WIDE FLANGE COLUMN BASE DETAIL

NTS

(5001)

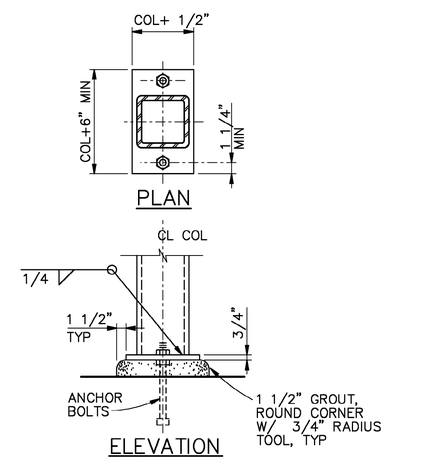

NOTES:

1. ANCHOR BOLTS SHALL BE 3/4" DIA x 1'–0" WITH LEVELING NUTS UNLESS OTHERWISE SHOWN.
2. GROUT SHALL BE NONSHRINK AS PER SPECIFICATIONS, FLOWABLE.

TUBE STEEL COLUMN BASE DETAIL

NTS

(5002)

NOMINAL BEAM DEPTH, INCHES	ROWS OF BOLTS	LENGTH (3) OF ANGLE
36	7	1'–8 1/2"
30–33	6	1'–5 1/2"
24–27	5	1'–2 1/2"
16–21	4	11 1/2"
12–15	3	8 1/2"
8–10	2	5 1/2"
6	1	3"

NOTES:

1. NUMBER OF ROWS IS EQUAL TO NUMBER OF BOLTS TO ENCLOSED WEB.
2. ALL FRAMING CONNECTIONS SHALL CONFORM TO SCHEDULE UNLESS DETAILED OTHERWISE ON FRAMING PLANS.
3. ADD 1 1/2 " TO ANGLE LENGTH FOR STAGGERED BOLT CONNECTIONS.

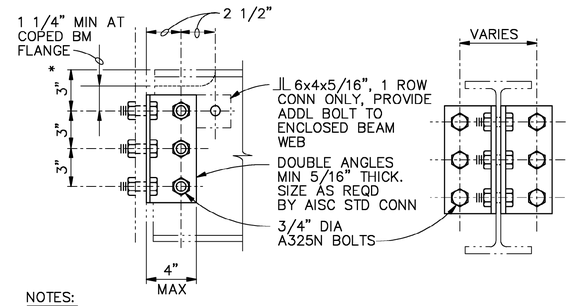

NOTES:

*3" DIMENSION TYP EXCEPT AS RECOMMENDED BY AISC FOR LARGER MEMBERS.

TYPICAL BEAM FRAMING CONNECTION DETAIL–STEEL

NTS

(5020)

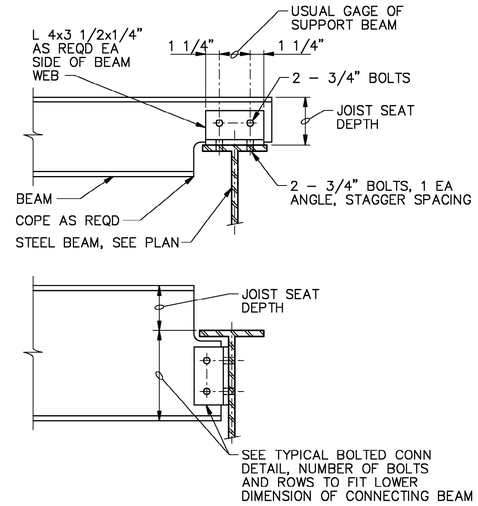

COPED BEAM CONNECTION DETAIL

NTS

(5026)

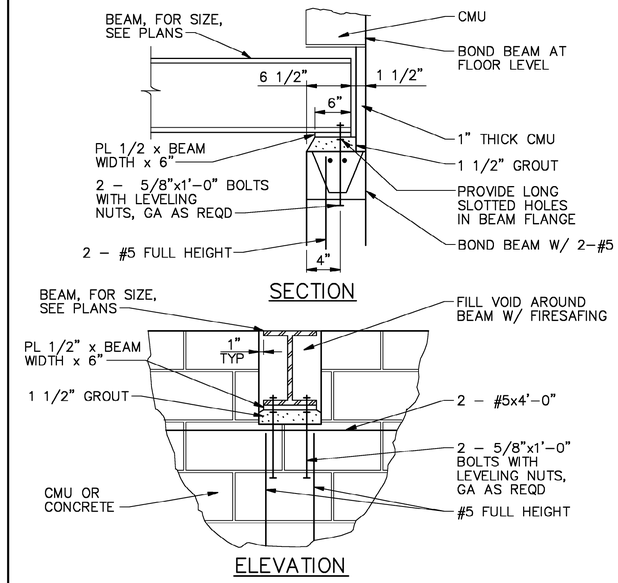

BEAM SEAT DETAIL

NTS

(5065)

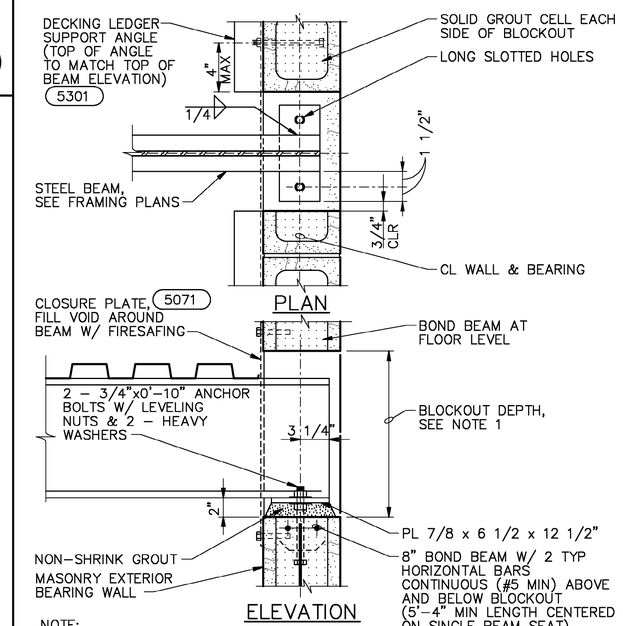

NOTE:

PROVIDE BLOCKOUT DEPTH AS REQUIRED FOR SETTING BEAMS, (BEAM DEPTH + 6") MIN, OR SET BEAMS BEFORE COMPLETING WALL ABOVE.

BEAM SEAT DETAIL

NTS

(5067)

©CH2M HILL

THIS DOCUMENT, AND THE IDEAS AND DESIGNS INCORPORATED HEREIN, AS AN INSTRUMENT OF PROFESSIONAL SERVICE, IS THE PROPERTY OF CH2M HILL AND IS NOT TO BE USED, IN WHOLE OR IN PART, FOR ANY OTHER PROJECT WITHOUT THE WRITTEN AUTHORIZATION OF CH2MHILL.

REUSE OF DOCUMENTS:

BID DOCUMENTS

DSGN D.R.LANGE					
DR M.A.REICHERT					
CHK R.A.GERMAINE					
APVD K.K.HARGREAVES	NO.	DATE	REVISION	BY	APVD

VERIFY SCALE
BAR IS ONE INCH ON ORIGINAL DRAWING.
0 1"
IF NOT ONE INCH ON THIS SHEET, ADJUST SCALES ACCORDINGLY.

CH2MHILL

126 ARW ILLINOIS AIR NATIONAL GUARD
SCOTT AIR FORCE BASE, IL
PROJECT NUMBER VDYF989075
KC–135 FLIGHT TRAINING UNIT

STANDARD DETAILS

STRUCTURAL

SHEET	45
DWG	D–4
DATE	MAY 2001
PROJ	160085.B1

FILENAME: 0085d04d.dlv PLOT DATE: 24–MAY–2001 PLOT TIME: 14:07:25

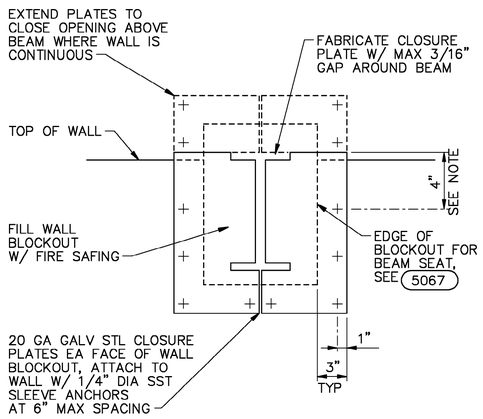

NOTE:
FOR DETAIL 5067 CLOSURES, LOCATE ANCHORS SO THEY DO NOT CONFLICT WITH LEDGER ANGLE.

BEAM SEAT CLOSURE PLATE DETAIL

NTS

5071

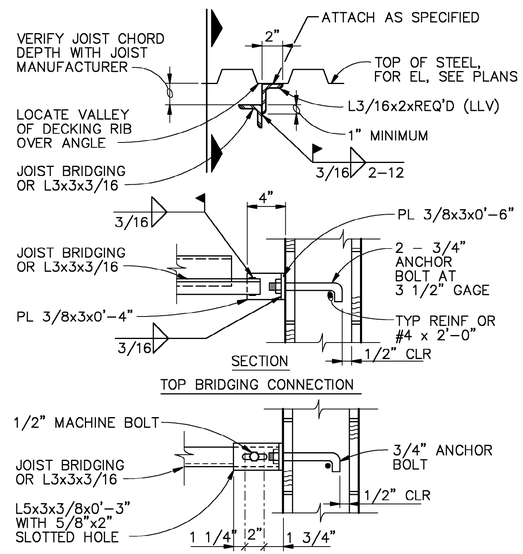

BRIDGING/WALL CONNECTION DETAIL

NTS

5223

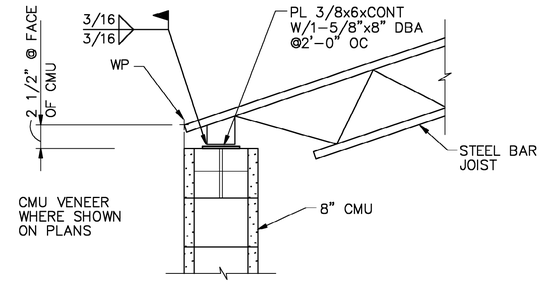

JOIST SEAT @ EAVE DETAIL

NTS

5311

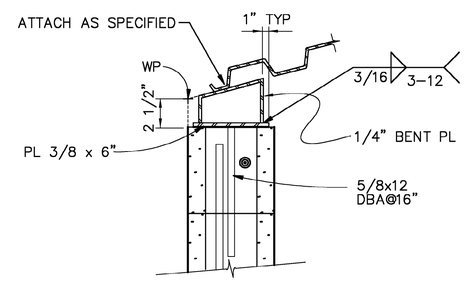

PARALLEL TO WALL

METAL DECK AT BEARING WALL DETAIL

NTS

5312

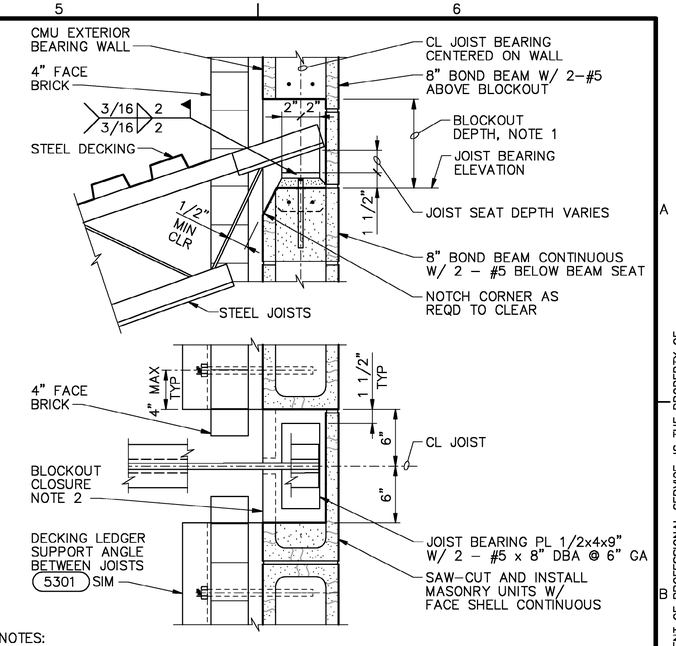

NOTES:

1. PROVIDE BLOCKOUT DEPTH AS REQUIRED FOR SETTING JOISTS, 8" MIN, OR SET JOISTS BEFORE COMPLETING WALL ABOVE.
2. AFTER JOISTS SET, WRAP EMBEDDED ENDS OF JOISTS W/ 2 LAYERS OF BUILDING PAPER. DRYPACK GROUT BLOCKOUT SOLID W/ INSIDE FACE FINISHED W/ MASONRY FACE SHELLS CUT 1/2" CLEAR OF JOIST.

STEEL JOIST SEAT DETAIL

NTS

5313

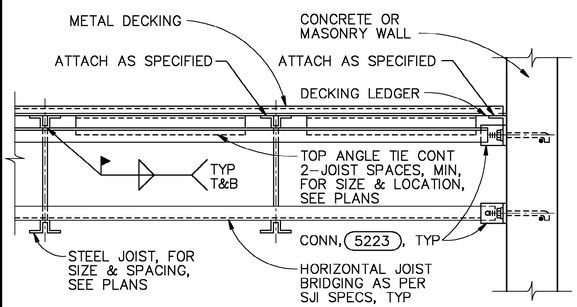

TYPICAL JOIST BRIDGING DETAIL

NTS

5222

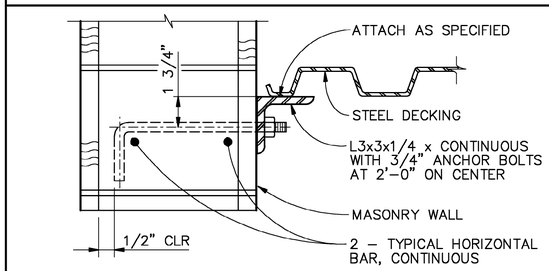

DECKING LEDGER SUPPORT ANGLE DETAIL

NTS

5301

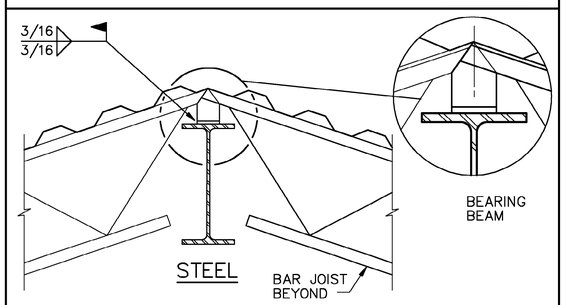

JOIST SEAT AT RIDGE DETAIL

NTS

5310

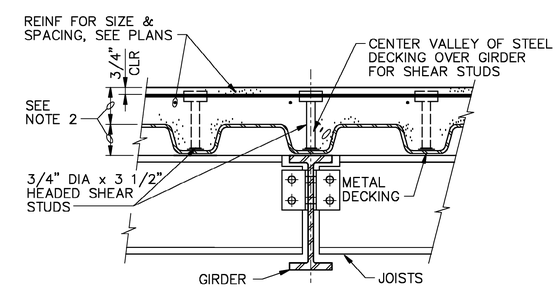

NOTES:

1. TOTAL NUMBERS OF SHEAR STUDS PER BEAM SHOWN ON FRAMING PLANS. SPACE STUDS UNIFORMLY OVER FULL LENGTH OF BEAM.
2. FOR SLAB AND DECKING DEPTH, SEE PLANS.

COMPOSITE BEAM DETAIL

NTS

5331

DSGN D.R.LANGE						VERIFY SCALE
DR M.A.REICHERT						BAR IS ONE INCH ON ORIGINAL DRAWING. 0 1" IF NOT ONE INCH ON THIS SHEET, ADJUST SCALES ACCORDINGLY.
CHK R.A.GERMAINE						
APVD K.K.HARGREAVES	NO.	DATE	REVISION	BY	APVD	

CH2MHILL

126 ARW ILLINOIS AIR NATIONAL GUARD
SCOTT AIR FORCE BASE, IL
PROJECT NUMBER VDYF989075
KC–135 FLIGHT TRAINING UNIT

STANDARD DETAILS

STRUCTURAL

SHEET	46
DWG	D–5
DATE	MAY 2001
PROJ	160085.B1

FILENAME: 0085d05d.dlv PLOT DATE: 24–MAY–2001 PLOT TIME: 14:07:51

BID DOCUMENTS

REUSE OF DOCUMENTS: THIS DOCUMENT, AND THE IDEAS AND DESIGNS INCORPORATED HEREIN, AS AN INSTRUMENT OF PROFESSIONAL SERVICE, IS THE PROPERTY OF CH2M HILL AND IS NOT TO BE USED, IN WHOLE OR IN PART, FOR ANY OTHER PROJECT WITHOUT THE WRITTEN AUTHORIZATION OF CH2MHILL.
©CH2M HILL

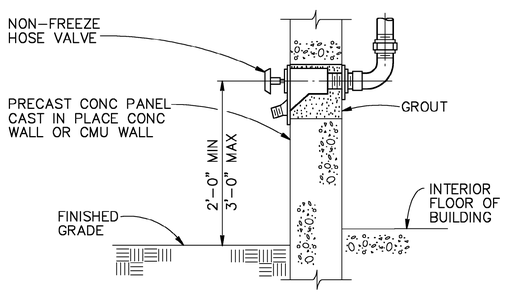

NON-FREEZE HOSE VALVE DETAIL

NTS

15166

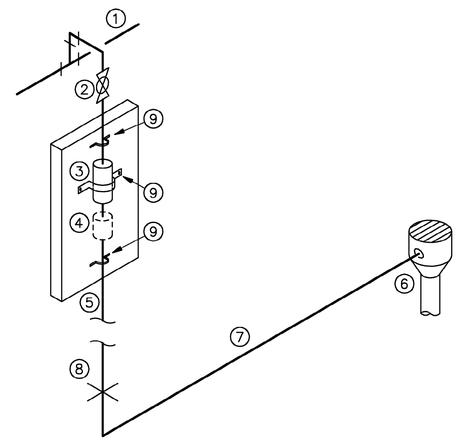

1. ACCESSIBLE COLD WATER ABOVE CEILING
2. BALL VALVE V300
3. TRAP PRIMER VALVE. PROVIDE ACCESS PANEL, UNLESS EXPOSED OR ABOVE LAY-IN CELIING.
4. WHERE MULTIPLE FLOOR DRAINS ARE LOCATED IN THE SAME AREA, PROVIDE TRAP PRIMER DISTRIBUTION UNIT (MAKE ACCESSIBLE).
5. 1/2" DISCHARGE LINE. CONCEAL IN WALL
6. CONNECT TO INLET SIDE OF FLOOR DRAIN
7. 1/2" DISCHARGE LINE TO EACH FLOOR DRAIN BELOW FLOOR
8. FINISHED FLOOR
9. ANCHOR ALL COMPONENTS TO PREVENT MOVEMENT

AUTOMATIC TRAP SEAL PRIMER DETAIL

NTS

15201

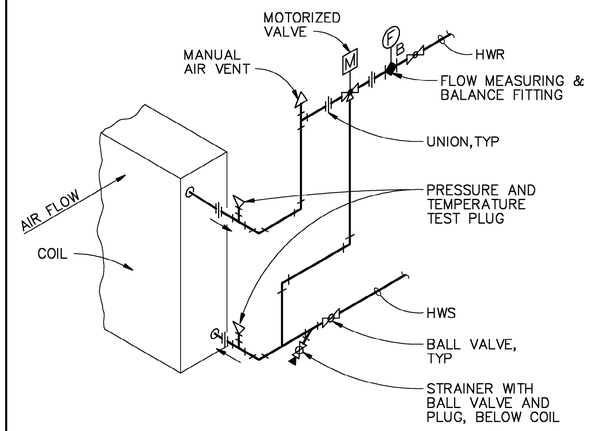

NOTES:

1. DETAIL GIVES REQUIRED SEQUENCE OF EQUIPMENT AND VALVES. PIPING ARRANGEMENT MAY VARY TO SUIT FIELD REQUIREMENTS. PIPE COIL FOR COUNTER FLOW WITH AIR.
2. 3-WAY VALVE SHALL BE 2-POSITION FOR VALVE BOX COIL, MODULATING FOR AHU-1 COIL.

HOT WATER COIL CONNECTION DETAIL

NTS

15432

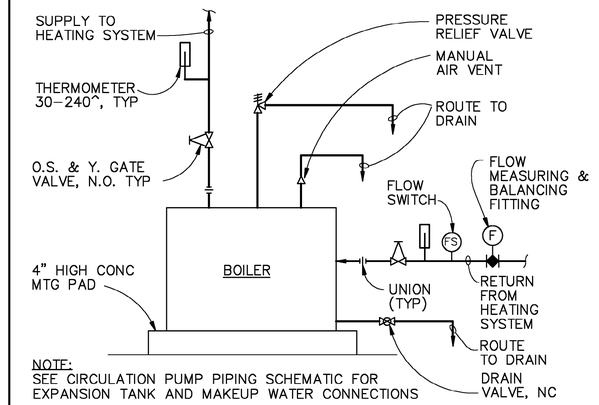

NOTE:
SEE CIRCULATION PUMP PIPING SCHEMATIC FOR EXPANSION TANK AND MAKEUP WATER CONNECTIONS

BOILER PIPING SCHEMATIC

NTS

15439

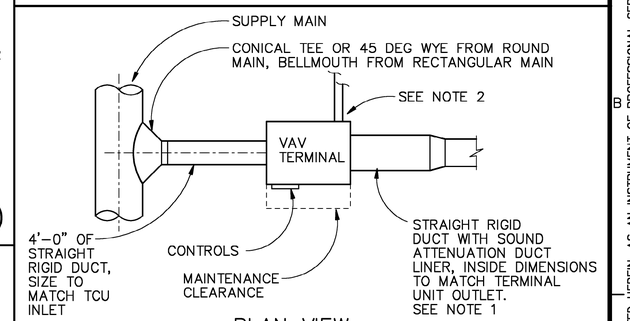

PLAN VIEW

NOTES:

1. TERMINAL MANUFACTURER'S STANDARD DISCHARGE SOUND ATTENUATOR IS AN ACCEPTABLE ALTERNATIVE.
2. FOR PIPING CONNECTIONS AT TERMINAL HEAT COILS REFER TO DETAIL 15432
3. SUPPORT TERMINAL WITH HANGERS FROM BUILDING STRUCTURE.

VAV TERMINAL UNIT MOUNTING DETAIL

NTS

15441

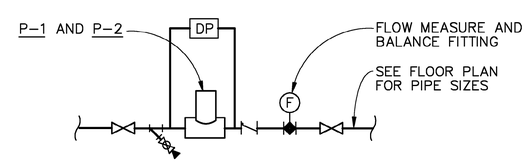

INLINE PUMP INSTALLATION DETAIL

NTS

15434

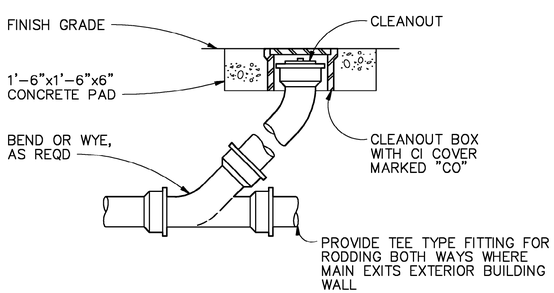

EXTERIOR CLEANOUT DETAIL

NTS

15180

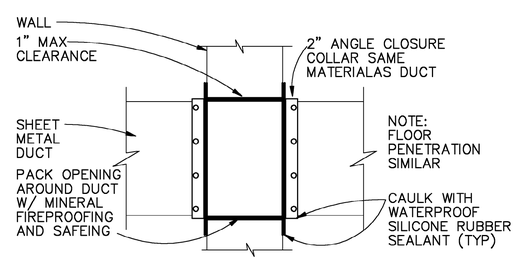

DUCT WALL PENETRATION DETAIL

NTS

15413

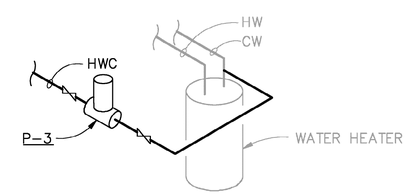

HOT WATER RECIRCULATING PUMP INSTALLATION DETAIL

NTS

15435

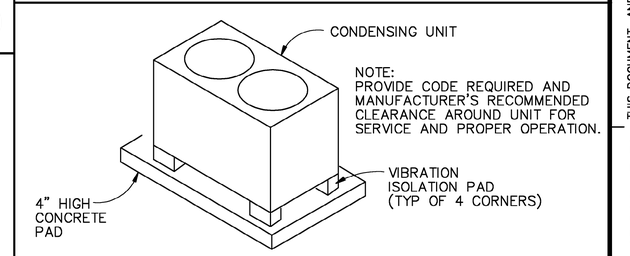

CONDENSING UNIT SUPPORT DETAIL

NTS

15444

DSGN M.H.PRATT						VERIFY SCALE
DR L.SHAFFER						BAR IS ONE INCH ON ORIGINAL DRAWING. 0 1"
CHK M.RAHMAN						IF NOT ONE INCH ON THIS SHEET, ADJUST SCALES ACCORDINGLY.
APVD K.K.HARGREAVES	NO.	DATE	REVISION	BY	APVD	

CH2MHILL

126 ARW ILLINOIS AIR NATIONAL GUARD
SCOTT AIR FORCE BASE, IL
PROJECT NUMBER VDYF989075
KC-135 FLIGHT TRAINING UNIT

STANDARD DETAILS

BUILDING SERVICES

SHEET 47
DWG D-6
DATE MAY 2001
PROJ 160085.B1

FILENAME: 0085d06d.dlv PLOT DATE: 24-MAY-2001 PLOT TIME: 14:08:15

BID DOCUMENTS

REUSE OF DOCUMENTS: THIS DOCUMENT, AND THE IDEAS AND DESIGNS INCORPORATED HEREIN, AS AN INSTRUMENT OF PROFESSIONAL SERVICE, IS THE PROPERTY OF CH2M HILL AND IS NOT TO BE USED, IN WHOLE OR IN PART, FOR ANY OTHER PROJECT WITHOUT THE WRITTEN AUTHORIZATION OF CH2MHILL.
©CH2M HILL

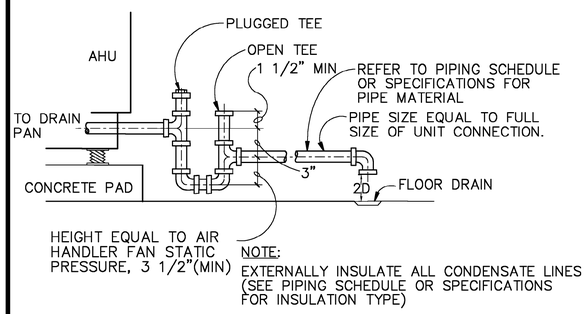

CONDENSATE DRAIN DETAIL
NTS

15446

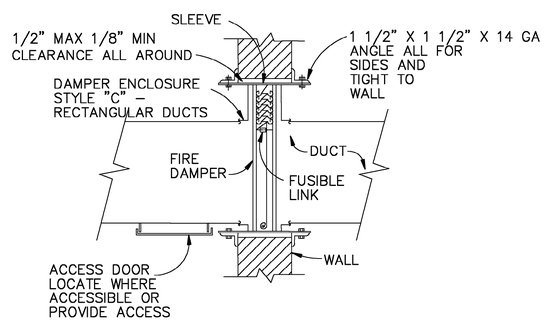

FIRE DAMPER DETAIL
NTS

15447

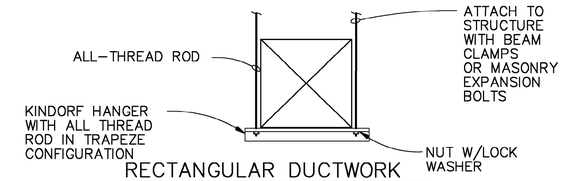

RECTANGULAR DUCTWORK

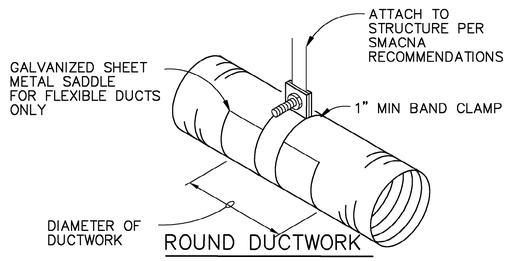

ROUND DUCTWORK

NOTES:
1. DO NOT USE POWER POWERED FASTENING SYSTEMS TO ATTACH SUPPORTS TO STRUCTURE
2. ALL CHANNEL SECTIONS SHALL BE HOT DIPPED GALVANIZED.
3. SUPPORT SYSTEM MUST NOT DAMAGE DUCT, INSULATION, OR CAUSE DUCT SHAPE DEFORMATION.
4. HANGER SIZES SHALL BE IN ACCORDANCE WITH SMACNA, LATEST EDITION

DUCTWORK SUPPORT DETAIL
NTS

15450

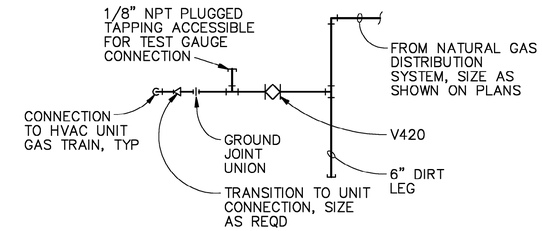

GAS–FIRED EQUIPMENT CONNECTION DETAIL
NTS

15454

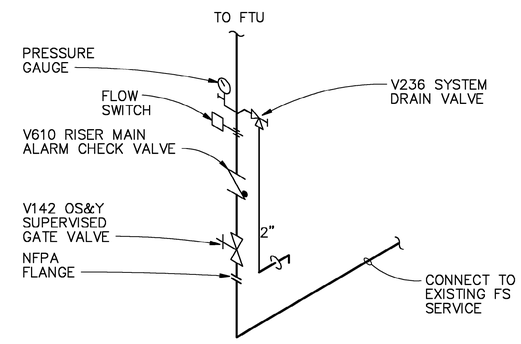

FIRE SPRINKLER WET–PIPE RISER DIAGRAM
NTS

15456

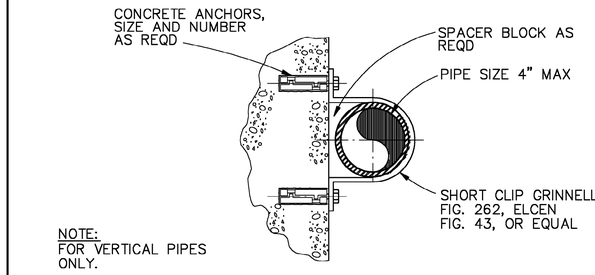

PIPE SUPPORT DETAIL
NTS

15503

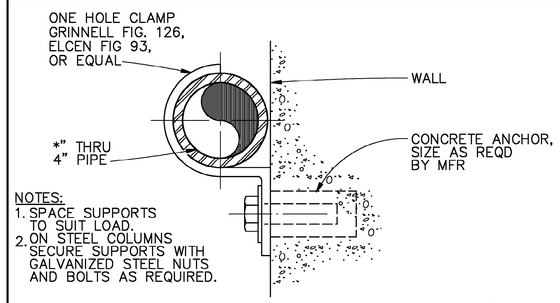

PIPE SUPPORT DETAIL
NTS

15504

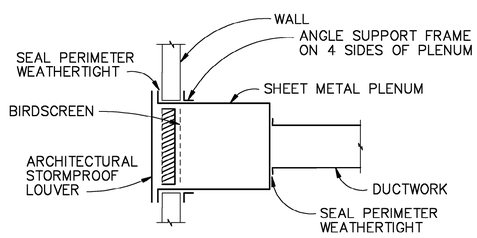

NOTES:
1. COORDINATE EXACT LOCATION AND MOUNTING HEIGHT WITH ARCHITECTURAL AND STRUCTURAL DRAWINGS

LOUVER PLENUM DETAIL
NTS

15449

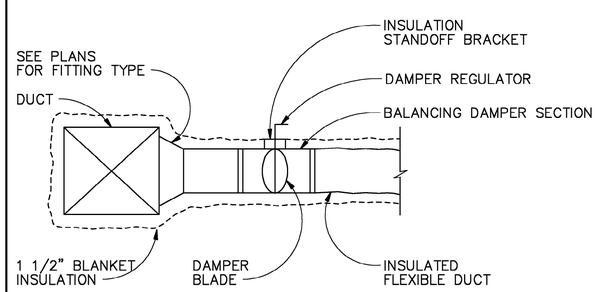

DUCT BRANCH CONNECTION DETAIL
NTS

15451

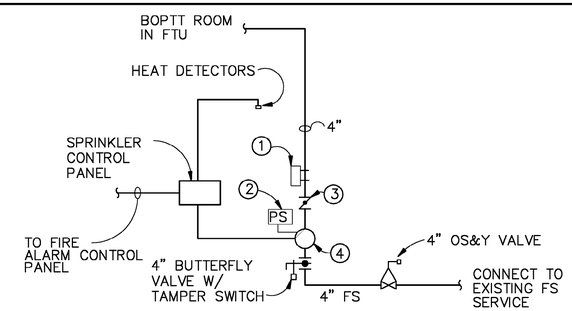

KEYED NOTES:
1. STRAP ON AIR COMPRESSOR
2. ALARM PRESSURE SWITCH
3. AIR CHECK VALVE
4. DOUBLE INTERLOCK PREACTION VALVE

FIRE SPRINKLER DRY–PIPE RISER DIAGRAM
NTS

15458

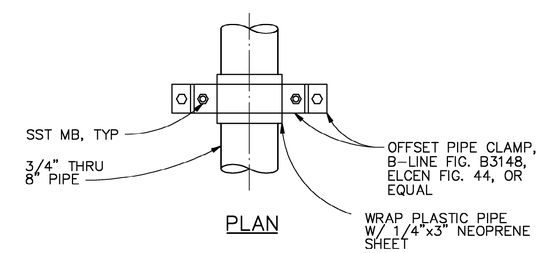

PLAN

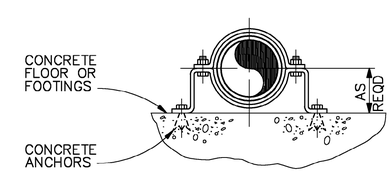

SECTION

PIPE SUPPORT DETAIL
NTS

15505

DSGN M.H.PRATT					
DR L.SHAFFER					
CHK M.RAHMAN					
APVD K.K.HARGREAVES	NO.	DATE	REVISION	BY	APVD

VERIFY SCALE
BAR IS ONE INCH ON ORIGINAL DRAWING.
0 1"
IF NOT ONE INCH ON THIS SHEET, ADJUST SCALES ACCORDINGLY.

CH2MHILL

126 ARW ILLINOIS AIR NATIONAL GUARD
SCOTT AIR FORCE BASE, IL
PROJECT NUMBER VDYF989075
KC–135 FLIGHT TRAINING UNIT

STANDARD DETAILS
BUILDING SERVICES

SHEET 48
DWG D–7
DATE MAY 2001
PROJ 160085.B1

FILENAME: 0085d07d.dlv PLOT DATE: 24–MAY–2001 PLOT TIME: 14:08:53

BID DOCUMENTS

REUSE OF DOCUMENTS: THIS DOCUMENT, AND THE IDEAS AND DESIGNS INCORPORATED HEREIN, AS AN INSTRUMENT OF PROFESSIONAL SERVICE, IS THE PROPERTY OF CH2M HILL AND IS NOT TO BE USED, IN WHOLE OR IN PART, FOR ANY OTHER PROJECT WITHOUT THE WRITTEN AUTHORIZATION OF CH2MHILL.
©CH2M HILL

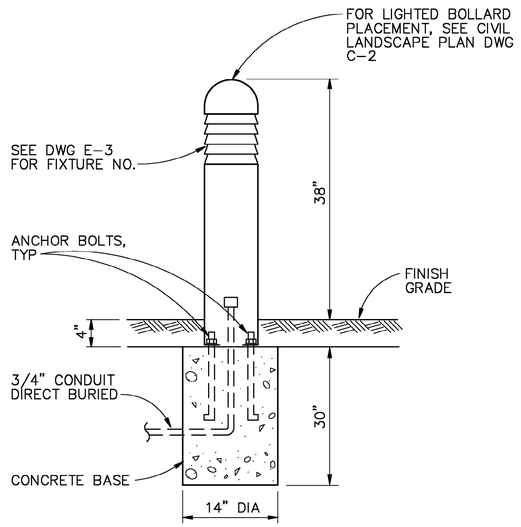

42" LIGHTED BOLLARD DETAIL

NTS

16399

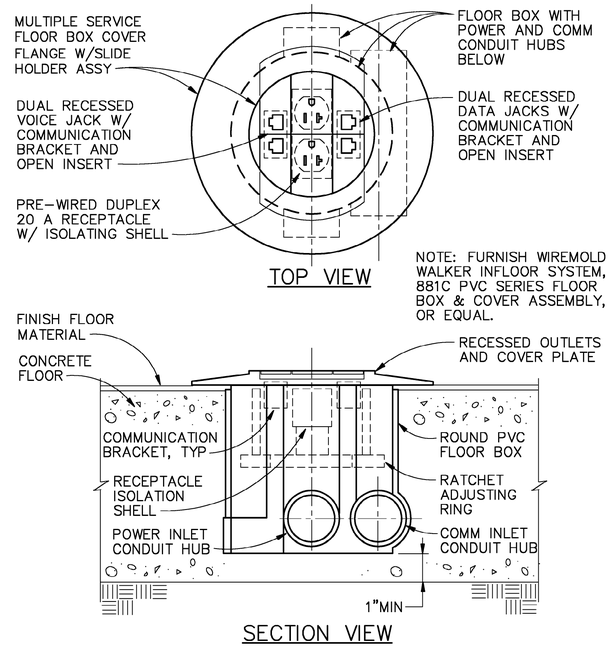

RECESS FLOOR POWER/COMM RECEPTACLE DETAIL

NTS

16401

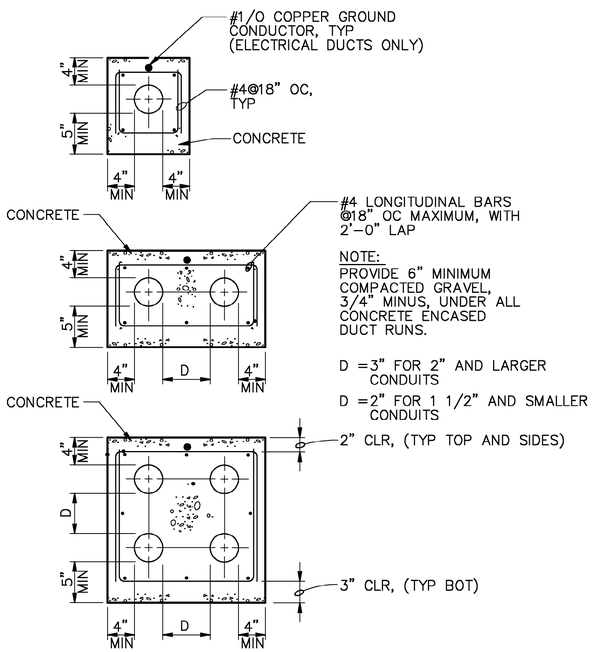

TYPICAL DUCT BANK DETAILS

NTS

16400

DSGN B.W.WILLIAMS						VERIFY SCALE
DR M.A.REICHERT						BAR IS ONE INCH ON ORIGINAL DRAWING. 0 1" IF NOT ONE INCH ON THIS SHEET, ADJUST SCALES ACCORDINGLY.
CHK R.E.NAGEL						
APVD K.K.HARGREAVES	NO.	DATE	REVISION	BY	APVD	

CH2MHILL

126 ARW ILLINOIS AIR NATIONAL GUARD
SCOTT AIR FORCE BASE, IL
PROJECT NUMBER VDYF989075
KC-135 FLIGHT TRAINING UNIT

STANDARD DETAILS

ELECTRICAL

SHEET	50
DWG	D-9
DATE	MAY 2001
PROJ	160085.B1

FILENAME: 0085d09d.dwg PLOT DATE: 18-Jul-2001 PLOT TIME: 07:02:48

BID DOCUMENTS

THIS DOCUMENT, AND THE IDEAS AND DESIGNS INCORPORATED HEREIN, AS AN INSTRUMENT OF PROFESSIONAL SERVICE, IS THE PROPERTY OF CH2M HILL AND IS NOT TO BE USED, IN WHOLE OR IN PART, FOR ANY OTHER PROJECT WITHOUT THE WRITTEN AUTHORIZATION OF CH2MHILL. ©CH2M HILL

NOTE:
TOTAL LOADING ON EACH CONC HANGER ROD ANCHOR SHALL NOT EXCEED MFR'S RECOMMENDED LOADINGS.

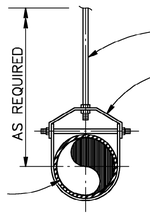

NOTE:
FOR INSULATED PIPES, USE GRINNELL FIG. 167 OR B FIGURE B3151 INSULATION PROTECTION SHIELD.

PIPE HANGER DETAIL
NTS

15550

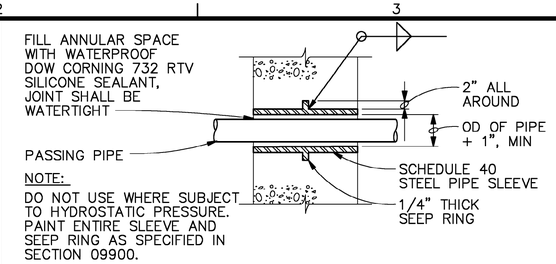

NOTE:
DO NOT USE WHERE SUBJECT TO HYDROSTATIC PRESSURE. PAINT ENTIRE SLEEVE AND SEEP RING AS SPECIFIED IN SECTION 09900.

FLOOR AND WALL PIPE SLEEVE DETAIL
NTS

15604

NOTE:
TOTAL LOADING ON EACH HANGER ROD ANCHOR SHALL NOT EXCEED MFR'S RECOMMENDED LOADINGS.

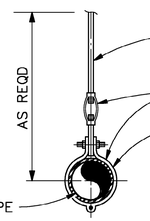

PIPE HANGER DETAIL
NTS

15551

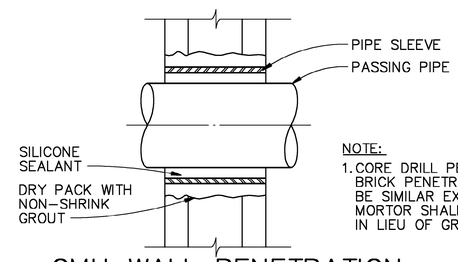

NOTE:
1. CORE DRILL PENETRATIONS. BRICK PENETRATIONS SHALL BE SIMILAR EXCEPT THAT MORTOR SHALL BE USED IN LIEU OF GROUT.

CMU WALL PENETRATION SEAL DETAIL
NTS

15612

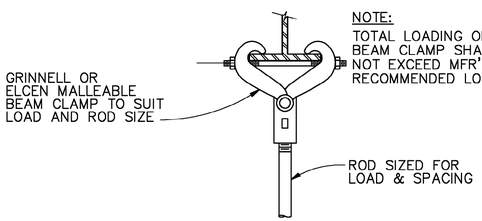

NOTE:
TOTAL LOADING OF EACH BEAM CLAMP SHALL NOT EXCEED MFR'S RECOMMENDED LOADINGS.

BEAM CLAMP DETAIL
NTS

15556

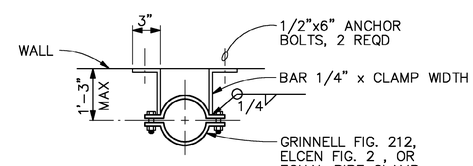

NOTE:
HOT DIP GALVANIZE AFTER FABRICATION.

PIPE SWAY BRACE DETAIL
NTS

15711

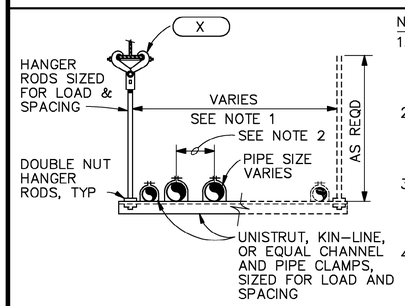

NOTES:
1. LENGTH VARIES WITH NUMBER OF PIPES TO BE SUPPORTED, AND SPACING BETWEEN PIPES.
2. SPACING BETWEEN PIPES VARIES ACCORDING TO PIPE SIZES. SEE DRAWINGS OR SPECS FOR DISTANCE.
3. ALLOWABLE SPAN, NUMBER AND SIZE OF SUPPORT RODS, AND LOAD PER MFR'S RECOMMENDATIONS.
4. TOTAL LOADING ON HANGER ROD ANCHORS SHALL NOT EXCEED MFR'S RECOMMENDED LOADINGS.

TRAPEZE PIPE HANGER DETAIL
NTS

15558

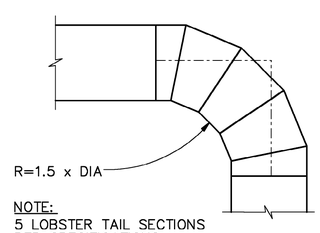

NOTE:
5 LOBSTER TAIL SECTIONS PER SPECIFICATIONS

TYPICAL 5 PIECE ELBOW DETAIL
NTS

15970

DSGN M.H.PRATT					
DR L.SHAFFER					
CHK M.RAHMAN					
APVD K.K.HARGREAVES	NO.	DATE	REVISION	BY	APVD

VERIFY SCALE
BAR IS ONE INCH ON ORIGINAL DRAWING.
0 1"
IF NOT ONE INCH ON THIS SHEET, ADJUST SCALES ACCORDINGLY.

CH2MHILL

126 ARW ILLINOIS AIR NATIONAL GUARD
SCOTT AIR FORCE BASE, IL
PROJECT NUMBER VDYF989075
KC-135 FLIGHT TRAINING UNIT

STANDARD DETAILS
BUILDING SERVICES

SHEET 49
DWG D-8
DATE MAY 2001
PROJ 160085.B1

FILENAME: 0085d08d.dlv PLOT DATE: 24-MAY-2001 PLOT TIME: 14:09:20

BID DOCUMENTS

REUSE OF DOCUMENTS: THIS DOCUMENT, AND THE IDEAS AND DESIGNS INCORPORATED HEREIN, AS AN INSTRUMENT OF PROFESSIONAL SERVICE, IS THE PROPERTY OF CH2M HILL AND IS NOT TO BE USED, IN WHOLE OR IN PART, FOR ANY OTHER PROJECT WITHOUT THE WRITTEN AUTHORIZATION OF CH2MHILL.
©CH2M HILL